DATA BOOK

W83C553F

SYSTEM I/O

CONTROLLER

WITH PCI

ARBITER

A Winbond Electronics Corp. Company

Publication number: 2565; Version A.7.0d.1

Copyright Notice

Copyright 1995, 1996, 1997
WINBOND SYSTEMS
LABORATORY.

All rights reserved.

Issued: September 27, 1995

Publication no: 2565; Ver. A.6

Issued: October 1, 1996

Publication no: 2565; Ver. A.6.2

Issued: March 1, 1997

Publication no: 2565; Ver. A.7.0b

Issued: September 1, 1997

Publication no: 2565; Ver.A.7.0c

Issued: February 22, 1998

Publication no. 2565; Ver.A.7.0d

Disclaimer

This document contains information on a product under development at WINBOND SYSTEMS LABORATORY. The information is intended to help you to evaluate this product. WINBOND SYSTEMS LABORATORY reserves the right to change or discontinue work on this proposed product without notice.

WINBOND SYSTEMS LABORATORY makes no warranty for the use of its products and bears no responsibility for any errors which appear in this document. Specifications are subject to change without notice.

Trademarks

The company and product names mentioned in this document may be the trademarks or registered trademarks of their manufacturers.

W I N B O N D
SYSTEMS
LABORATORY

2727 North First Street,
San Jose, CA 95134
USA

PREFACE

This document describes the function and use of the Winbond Systems Laboratory W83C553F System I/O (SIO) Controller with PCI arbiter. It provides all of the information necessary for design engineers to incorporate the device into notebook and desktop computer systems.

Organization of the Manual

The information in this document is organized into the following seven chapters:

Chapter 1 General information	This consists of an overview discussion of the product and its features. Included are the stylistic conventions used in this manual.
Chapter 2 Pin Descriptions	Provides pin-out diagrams and pin descriptions.
Chapter 3 System Architecture	Discusses the design of the device and the implementation of the device's features.
Chapter 4 Register Information	Describes the software control of the chip set's various functions.
Chapter 5 Electrical Specifications	Provides the operating specifications for the device.
Chapter 6 Timing Diagrams	Provides timing diagrams and tables of timing values.
Chapter 7 Mechanical Description	Shows the critical dimensions of the device.
Chapter 8 Thermal Information	Shows the temperature calculation of the device.
Appendix A	I/O Driver Characteristics

TABLE OF CONTENTS

Preface 1
1.0 General Information 5
1.1 Features 5
1.2 General Description 7
1.3 Stylistic Conventions Used in this Manual 9
2.0 Pin Descriptions 10
2.1 Pin Assignments 10
2.2 Pin Description 13
3.0 System Architecture 28
3.1 Overview 28
3.2 Active State 29
3.3 Bus Structures 30
3.4 PCI-to-ISA Bridge 31
3.5 PCI Bus Cycles 31
3.6 PCI I/O Read Cycle 34
3.7 PCI I/O Write Cycle 35
3.8 PCI Configuration Read Cycle 36
3.9 PCI Configuration Write Cycle 37
3.10 PCI Memory Read 38
3.11 PCI Memory Write 39
3.12 PCI Memory Read Line 40
3.13 PCI Memory Write and Invalidate 40
3.14 Transaction Termination 41
3.14.1 PCI Disconnect With Data Transfer Timing 41
3.14.2 PCI Disconnect Without Data Transfer Timing 42
3.14.3 PCI Target Abort Timing 43
3.14.4 PCI Preemption Timing 44
3.14.5 PCI Master Abort Timing 45
3.15 IDE Interface Operation 46
3.16 PIO Transfers 47
3.17 32-Bit Data Transfers 48
3.18 Bus Master Transfers 49
3.19 82C59A Interrupt Controller 49
3.20 82C37A DMA Controller 49
3.21 82C54 Counter/Timer 50
3.22 PCI Arbiter 50
3.23 Break Events 51
3.24 CPU Modes (X86 or PowerPC) 51
4.0 Register Information 52
4.1 PCI Configuration Space - ISA Bridge Registers (Function 0) 54
4.1.1 Function 0 Header Registers 54
4.1.2 Function 0 Control Registers 58
4.2 ISA Bridge (Function 0) I/O Registers 78
4.2.1 DMA Controller I/O Registers 78
4.2.2 Programmable Interrupt Controller (PIC) Registers 93
4.2.3 Counter/Timer I/O Registers 101
4.2.4 Miscellaneous I/O Control Registers 105
4.3 PCI Configuration Space - Bus Master IDE Registers (Function 1) 109
4.3.1 Function 1 Header Registers 111

4.3.2 Function 1 Control Registers 123
4.4 Bus Master IDE (Function 1) I/O Registers 129
4.4.1 Primary/Secondary Command Registers 130
4.4.2 Primary/Secondary Status Registers 131
4.4.3 Primary/Secondary PRD Table 132

5.0 Electrical Specifications 133
6.0 Timing Diagrams 135
6.1 PCI Timing Diagrams 136
6.2 IDE/ATA Data Transfers 142
6.3 ISA Bus Timing 150
7.0 Mechanical Description 153
8.0 Thermal Information 154
9.0 Appendix A 155

1.0 GENERAL INFORMATION

1.1 Features

High Integration PCI-ISA solution

- Optimized for lowest system cost
- Complies with PCI Revision 2.0 specification
- Universal PCI device supporting x86 and PowerPC (non-x86) modes of operation

Nand tree on most signal pins to facilitate board level testing in PCB manufacturing environment

Integrated PCI Bus Master IDE controller

- Dual channel Bus Master IDE for up to 4 peripherals, including hard drives, ATAPI (IDE) CD-ROMs, tapes, etc.
- Multi-threading capability allows two simultaneous I/O processes
- Independent IDE Timing registers allow fast/slow devices on the same cable
- Two independent DMA channels for Bus Master scatter/gather DMA transfers across the PCI bus
- Large 64 byte DMA FIFO for zero wait state PCI burst transfers
- Support for multiword DMA Mode 1 (13.3 MB/s), Mode 2 (16.6 MB/s) IDE drives
- PIO IDE support for Modes 0-4 disks
- Edge rate controlled outputs directly drive IDE headers
- Four byte pre-fetch and posted write buffers
- DMA channels can be re-configured for P-n-P motherboard devices
- Software and register set compatible with Intel Bus Master PCI-IDE specification (SFF 8038i)
- Supported by existing device drivers for MS-DOS, Windows, NT 3.1, NT 3.5x, NT4.0, OS/2 2.1, OS/2 Warp, NetWare 3.12 and 4.x**
- Recompiled PowerPC device drivers also available

PCI Arbiter

- Supports CPU, IDE, ISA and five additional bus masters
- Programmable access windows allow fine tuning of PCI access for each bus master
- Can be disabled on power-up via strapped pin

**** OS/2, Novell driver by DTC**

Power Management Break Event support for Green PC applications

Built-in Integrated Peripheral Controller (IPC) with standard PC-AT peripherals

- Two 82C37A DMA controllers (types A, B, and F)
  - 32-bit addressing allows use of alternate CPUs, such as PowerPC
  - supports multiple 8-bit and 16-bit scatter/gather DMA channels
- Two 82C59A interrupt controllers
  - all IRQ inputs may be programmed for edge or level sensitivity
- One 82C54 counter/timer
- Routes external PCI interrupts to a software-selectable interrupt channel

PCI Bus Interface

- PCI Revision 2.1 compliant
- PCI clock frequencies up to 33 MHz at 5V
- Supports delayed completion for ISA cycles
- Active address decoding for internal I/O devices
- Subtractive decoding for ISA bridge, KBC and RTC
- Supports disconnection (with retry) for slow internal accesses to improve latency
- Short PCI bus ownership when mastering to minimize overall system latency
- Fast DMA transfers from I/O devices to PCI agents as a master
- Separate request and grant signals for ISA DMA and IDE controllers

ISA Bus Bridge

-
- Full implementation of a standard ISA bus
- Separate ISA and IDE data buses reduce noise and increase system performance
- Synchronous PCI-to-ISA interface with direct drive for 5 ISA slots

XD-Bus interface

- Support for BIOS ROM or PowerPC systems boot ROM
- Support for flash EPROM
- Provides keyboard controller connections
- Provides real-time clock connections
- Provides data buffer control

Miscellaneous

- Port B support
- Port 92 support

Uses 0.6um, ultra-low power CMOS technology for Rev. E and below; 0.5um for Rev. G.

Packaged in a 208-pin PQFP package

1.2 General Description

The W83C553F Enhanced System I/O (SIO) Controller with PCI Arbiter is a highly integrated device intended for use in any Peripheral Component Interconnect (PCI) system, supporting x86 or PowerPC (non-x86) type microprocessors. It supports all PCI 2.1 compliant CPU bridge implementations and directly interfaces with PCI and ISA industry standard buses, including two direct drive IDE channels supporting up to four peripherals.

The W83C553F is a universal PCI device which can be used with many CPU-to-PCI bridge solution. The W83C553F includes 32-bit ISA DMA addressing (rather than 24-bit) to simplify its use in systems using re-compiled versions of 32-bit operating systems (such as Windows NT running on PowerPC, Alpha, or other RISC CPU).

The peripheral controller integrated into the W83C553F includes two enhanced seven channel 82C37A 32-bit DMA controllers that support fast DMA transfers with a four byte line buffer to isolate the PCI bus from the ISA bus, enhancing performance. Both DMA controllers support scatter/gather data transfer capability.

The W83C553F Enhanced SIO controller provides the bridge between the PCI bus and the ISA expansion bus. It also integrates a PCI bus master IDE controller, an eight master PCI arbiter (which may be disabled if desired) and many of the common I/O functions found in today's ISA based PC systems. The W83C553F incorporates the logic for a complete PCI interface (master and slave) and ISA interface (master and slave). Also included is PCI and ISA arbitration, 14 level interrupt controller, a 16-bit BIOS timer, three programmable counter/timers, non-maskable-interrupt (NMI) control logic and register support for power management break events.

The built-in Enhanced PCI IDE Controller is a highly integrated dual port controller, providing a high performance data path between IDE devices and the PCI bus. Four IDE chip select signals provide accessing of up to four devices. Each device has its own programmable registers for selecting 16-bit and 32-bit data pipelined transfer rates, read-ahead and posted writes. A large 64 Byte DMA FIFO buffers data to and from the IDE disks enabling the integrated scatter/gather DMA controller to efficiently perform zero wait state burst transfers across the PCI bus when enough data is available in the FIFO. Bus master IDE significantly improves the overall system performance of a multi-master PCI configuration by greatly reducing the bus and CPU utilization required for the disk and CD-ROM interface. Burst data transfers at 33 MHz can be sustained at 132 MB/s on the PCI bus.

The integrated bus-mastering PCI-IDE core is the original Sonata W83789F core with some modification of interrupt routing. This controller is fully compliant to Intel's Bus-Mastering Controller and SFF8038i specifications. BIOS support has been incorporated in all the leading BIOS companies' software. Driver software, previously tested and qualified for the W83789F, is available from Winbond Systems Laboratory for all major operating systems, including recompiled PowerPC versions.

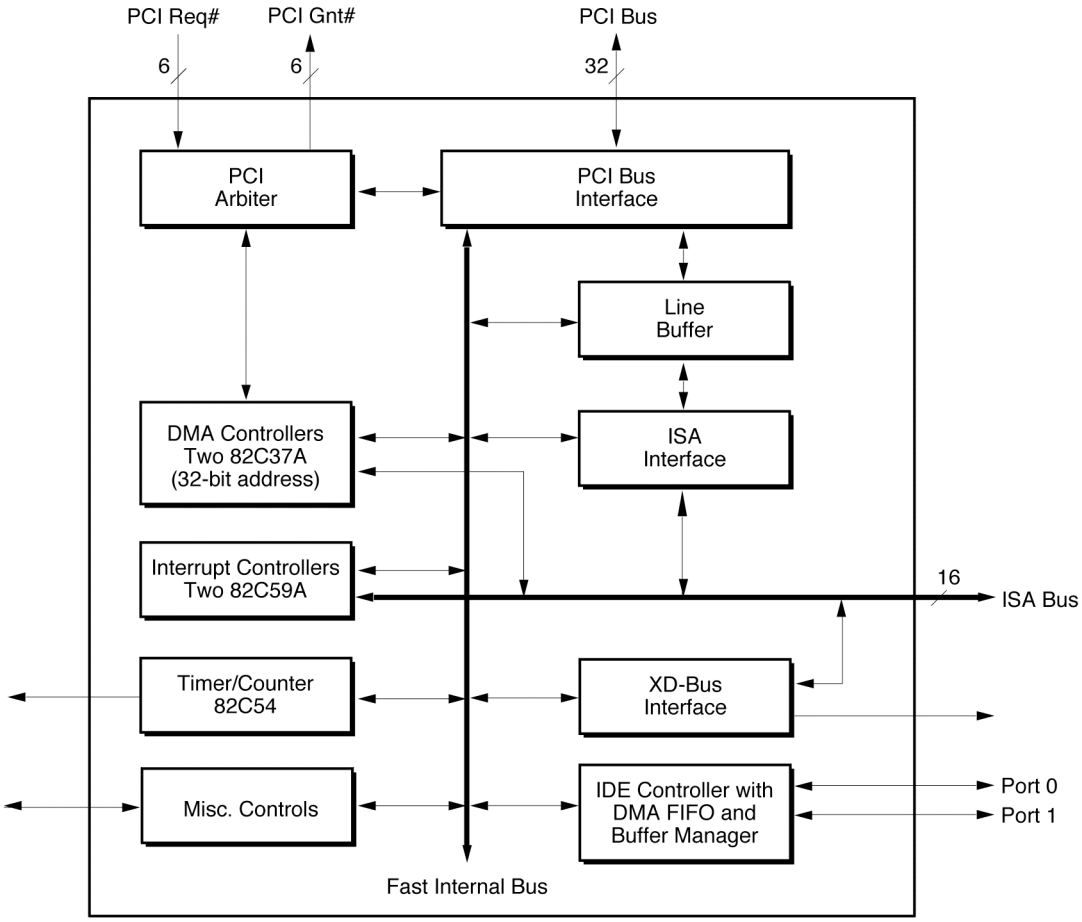

Figure 1-1. W83C553F Enhanced System I/O Controller Block Diagram

1.3 Stylistic Conventions Used in this Manual

The following stylistic conventions have been used throughout this manual:

- Signal names: Signals that are active at a low voltage level are indicated by a pound sign (#) after the signal name. Signal names not followed by the # are active at the high voltage level.
- Least significant bits in words and words within memory spaces begin with zero (0). When a range is given, the most significant bit is shown to the left and the least significant bit is shown to the right. For example, AD[31:0].
- Hexadecimal numbers are given with the number in upper case followed by a lower case 'h'. For example, “ 8AFFh”.

2.0 PIN DESCRIPTIONS

This chapter shows the pin diagrams, pins listed by pin number, device logic symbols, and describes each pin signal for the W83C553F.

2.1 Pin Assignments

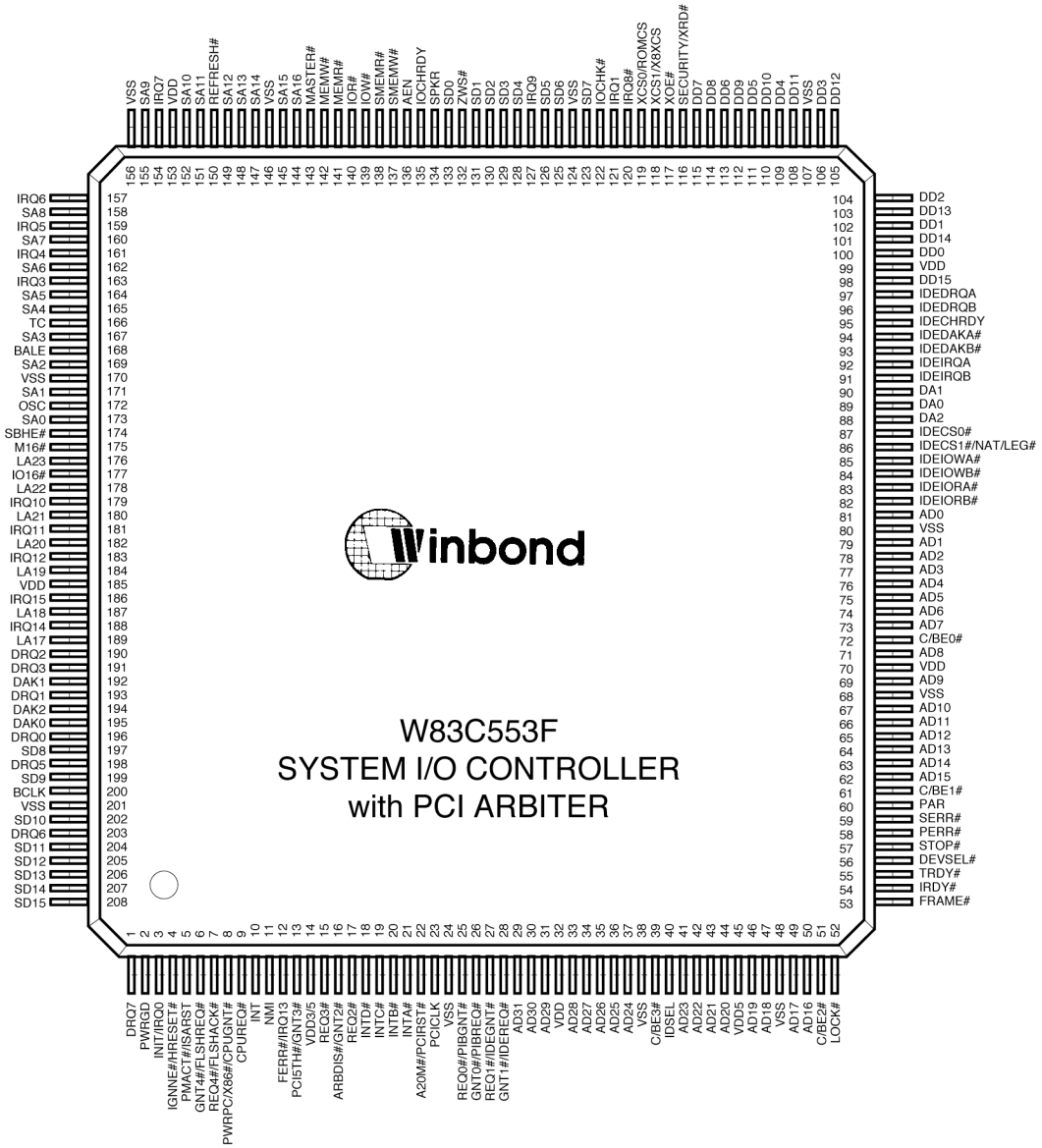

Figure 2-1. Pin Assignments for the W83C553F

Table 2-1. W83C553F Pins Listed by Pin Number

1	DRQ7	53	FRAME#	105	DD12	157	IRQ6
2	PWRGD	54	IRDY#	106	DD3	158	SA8
3	INIT	55	TRDY#	107	VSS	159	IRQ5
4	IGNNE#/HRESET#	56	DEVSEL#	108	DD11	160	SA7
5	PMACT#/ISARST	57	STOP#	109	DD4	161	IRQ4
6	GNT4#/FLSHREQ#	58	PERR#	110	DD10	162	SA6
7	REQ4#/FLSHACK#	59	SERR#	111	DD5	163	IRQ3
8	PWRPC/X86#/CPUGNT#	60	PAR	112	DD9	164	SA5
9	CPUREQ#	61	C/BE1#	113	DD6	165	SA4
10	INT	62	AD15	114	DD8	166	TC
11	NMI	63	AD14	115	DD7	167	SA3
12	FERR#/IRQ13	64	AD13	116	SECURITY/XRD#	168	BALE
13	PCI5TH#/GNT3#	65	AD12	117	XOE#	169	SA2
14	VDD	66	AD11	118	XCS1/X8XCS	170	VSS
15	REQ3#	67	AD10	119	XCS0/ROMCS	171	SA1
16	ARBDIS#/GNT2#	68	VSS	120	IRQ8#	172	OSC
17	REQ2#	69	AD9	121	IRQ1	173	SA0
18	INTD#	70	VDD	122	IOCHK#	174	SBHE#
19	INTC#	71	AD8	123	SD7	175	M16#
20	INTB#	72	C/BE0#	124	VSS	176	LA23
21	INTA#	73	AD7	125	SD6	177	IO16#
22	A20M#/PCIRST#	74	AD6	126	SD5	178	LA22
23	PCICLK	75	AD5	127	IRQ9	179	IRQ10
24	VSS	76	AD4	128	SD4	180	LA21
25	REQ0#/PIBGNT#	77	AD3	129	SD3	181	IRQ11
26	GNT0#/PIBREQ#	78	AD2	130	SD2	182	LA20
27	REQ1#/IDEGNT#	79	AD1	131	SD1	183	IRQ12
28	GNT1#/IDEREQ#	80	VSS	132	ZWS#	184	LA19
29	AD31	81	AD0	133	SD0	185	VDD
30	AD30	82	IDEIORB#	134	SPKR	186	IRQ15
31	AD29	83	IDEIORA#	135	IOCHRDY	187	LA18
32	VDD	84	IDEIOWB#	136	AEN	188	IRQ14
33	AD28	85	IDEIOWA#	137	SMEMW#	189	LA17
34	AD27	86	IDECS1#/NAT/	138	SMEMR#	190	DRQ2
35	AD26		LEG#	139	IOW#	191	DRQ3
36	AD25	87	IDECS0#	140	IOR#	192	DAK1
37	AD24	88	DA2	141	MEMR#	193	DRQ1
38	VSS	89	DA0	142	MEMW#	194	DAK2
39	C/BE3#	90	DA1	143	MASTER#	195	DAK0
40	IDSEL	91	IDEIRQB	144	SA16	196	DRQ0
41	AD23	92	IDEIRQA	145	SA15	197	SD8
42	AD22	93	IDEDAKB#	146	VSS	198	DRQ5
43	AD21	94	IDEDAKA#	147	SA14	199	SD9
44	AD20	95	IDECHRDY	148	SA13	200	BCLK
45	VDD	96	IDEDRQB	149	SA12	201	VSS
46	AD19	97	IDEDRQA	150	REFRESH#	202	SD10
47	AD18	98	DD15	151	SA11	203	DRQ6
48	VSS	99	VDD	152	SA10	204	SD11
49	AD17	100	DD0	153	VDD	205	SD12
50	AD16	101	DD14	154	IRQ7	206	SD13
51	C/BE2#	102	DD1	155	SA9	207	SD14
52	LOCK#	103	DD13	156	VSS	208	SD15
		104	DD2				

Note: Pins direction and assignment may not reflect exact pins , refers to exact pin description .

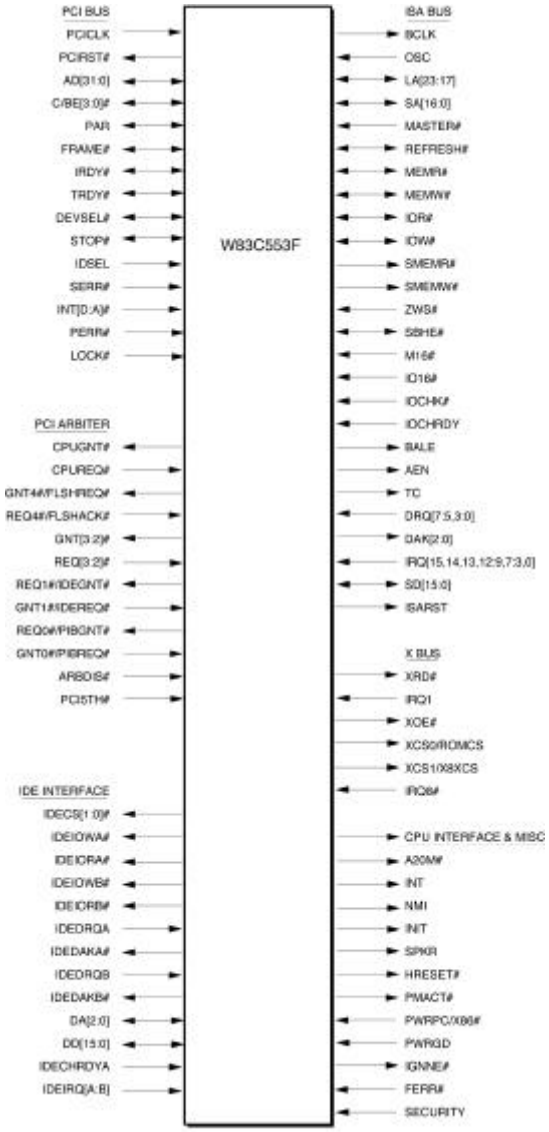

Figure 2-2. W83C553F Logic Symbol Diagram

2.2 Pin Descriptions

This section describes the location and function of each pin on the W83C553F. Note the following conventions used in the tables:

- Where more than one pin is listed for a signal, the first pin number corresponds to the most significant bit of the bus. For example, the Bus Command and Byte Enables bits 3 to 0 (C/BE[3:0]#) use pins 1, 12, 22, and 31.
- Active low is indicated by the pound (#) sign. For example, PCIRST# is active low.
- **Six strap pins are marked bold.**

Table 2-2. PCI Bus Signals

Pin Name	Pin #	Input/ Output	Description
PCICLK	23	Input	Clock. Provides timing for all transactions on the PCI bus. Also divides down to generate BCLK.
A20M# / PCIRST#	22	Output	Address Bit 20 Mask or PCI Reset. This multi-function pin functions as Address Bit 20 Mask when the W83C553F is in x86 mode, as determined by pin 8 strapping after power-up. It functions as PCI Reset when the W83C553F is in PowerPC mode. It is driven for one millisecond duration after one of the following conditions: - PWRGD active edge - Hot Reset is set (port 92, bit 0) - Reset Drive is set (Clock Divisor Register bit 3) PCI Reset is equivalent to ISA Reset logically inverted.
AD[31:0]	29-31,33-37,41-44, 46,47, 49, 50, 62-67, 69,71,73 - 79,81	Input/ Output	Address or Data. These bits are multiplexed on the same PCI pins. A valid 32-bit address is available during the address phase with FRAME# asserted. All subsequent cycles are the data phases.
C/BE[3:0]#	39, 51, 61, 72	Input/ Output	Bus Command and Byte Enables. These bits are multiplexed on the same PCI pins. During the address phase of a transaction, C/BE[3:0]# define the bus command. During the data phase, C/BE[3:0]# are used for byte enables.
PAR	60	Input/ Output	Parity. Even parity across AD[31:0] and C/BE[3:0]#. PAR is valid one clock after the address phase. For data phases, PAR is valid one clock after either IRDY# is asserted on the write transaction, or TRDY# is asserted on a read transaction. PAR remains valid until one clock after the completion of the current phase. PAR is driven only for read data phases, and checked during write data phases.

Table 2-2 (Continued). PCI Bus Signals

Pin Name	Pin #	Input/ Output	Description
FRAME#	53	Input/ Output	Cycle Frame. Indicates the start and duration of an access. It is asserted to indicate the start of a bus transaction; during which data transfers continue. When FRAME# is de-asserted, the transaction is in the final data phase.
PERR#	58	Input/ Output	PCI Parity Error.
IRDY#	54	Input/ Output	Initiator Ready. Indicates the initiating agent's ability to complete the current transaction's data phase. It is used jointly with TRDY#. During a write, it indicates that valid data is present on AD[31:0]. During a read cycle, it indicates the master is prepared to accept data.
TRDY#	55	Input/ Output	Target Ready. Indicates the target's ability to complete the current data phase of the transaction. It is used with IRDY#. During a read cycle, it indicates that valid data is present on AD[31:0]. During a write cycle, it indicates the target is prepared to accept data.
DEVSEL#	56	Input/ Output	Device Select. This signal is asserted by the W83C553F when it is acting as a target in a transaction. It is an input when the W83C553F is acting as the initiator of a transaction.
STOP#	57	Input/ Output	Stop. This is asserted to terminate the current transaction. It causes a disconnect condition, limiting slave I/O cycles to one data transfer since I/O burst transfers are not supported. During master cycles, it indicates the target wants to terminate the cycle.
IDSEL	40	Input	Initialization Device Select. Chip select signal, used during PCI configuration read and write cycles.
SERR#	59	Input/OD	System Error. The W83C553F monitors the SERR# pin to generate an NMI if enabled.

Table 2-2 (Continued). PCI Bus Signals

Pin Name	Pin #	Input/ Output	Description
INT[A:B]#	21-20	Input	PCI Interrupts. These PCI interrupts can be routed to the programmable interrupt controller inside the W83C553F under software control.
INT[C:D]#	19-18	Input/ OD	PCI Interrupts. These PCI interrupts can be routed to the programmable interrupt controller inside the W83C553F under software control.
LOCK#	52	Input	PCI Lock. LOCK# is used to indicate an atomic operation that may require multiple transactions to complete.

Table 2-3. PCI Arbiter Signals

Pin Name	Pin #	Input/ Output	Description
GNT0# / PIBREQ#	26	Output	This is a multifunction pin. The W83C553F PCI-ISA bridge (Function 0) asserts this signal to request the use of the PCI bus when the on-chip PCI arbiter is disabled. This pin functions as GNT0# when the on-chip PCI arbiter is enabled, allowing PCI access to an external master.
REQ0# / PIBGNT#	25	Input	This is a multifunction pin. An external arbiter asserts this signal to grant the next PCI access to the PCI-ISA bridge (Function 0) when the on-chip PCI arbiter is disabled. This pin functions as REQ0# when the on-chip PCI arbiter is enabled.
GNT1# / IDEREQ#	28	Output	This is a multifunction pin. The W83C553F IDE master (Function 1) asserts this signal to request the use of the PCI bus when the on-chip PCI arbiter is disabled. This pin functions as GNT1# when the on-chip PCI arbiter is enabled, allowing PCI access to an external master.
REQ1# / IDEGNT#	27	Input	This is a multifunction pin. An external arbiter asserts this signal to grant the next PCI access to the IDE master when the on-chip PCI arbiter is disabled. This pin functions as REQ1# when the on-chip PCI arbiter is enabled.
ARBDIS# / GNT2#	16	Input/ Output	When the on-chip PCI arbiter is enabled, it uses this pin to grant the next PCI access. If a 2.2k Ohm resistor straps this pin to ground, the PCI arbiter is disabled after power-up. This overrides the strapping of PCI5TH# on pin 13.
REQ2#	17	Input	When the on-chip PCI arbiter is enabled, external PCI masters use this pin to request access to the PCI bus.

Table 2-3 (continued). PCI Arbiter Signals

Pin Name	Pin #	Input/ Output	Description
PCI5TH# / GNT3#	13	Input/ Output	When the on-chip PCI arbiter is enabled, GNT3# behaves as a normal PCI grant output. If a 2.2K ohm resistor straps this pin to ground, pin 6 and 7 function as GNT4# and REQ4# after power-up. If this pin is weakly strapped to VCC, pin 6 and 7 function as FLSHREQ# and FLSHACK# after power-up. The PCI5TH# function is overridden by the ARBDIS# function (i.e., if the on-chip PCI arbiter is disabled, pin 6 and 7 function as FLSHREQ# and FLSHACK# no matter how PCI5TH# is strapped.)
REQ3#	15	Input	When the on-chip PCI arbiter is enabled, REQ3# behaves as a normal PCI request input.
GNT4# / FLSHREQ#	6	Output	This is a multifunction pin which is alternately used to request flushing all buffers or granting PCI access to an external master.
REQ4# / FLSHACK#	7	Input	This is a multifunction pin which is alternately used as flush acknowledge or as a PCI access request input.
PWRPC/X86# / CPUGNT#	8	Input/ Output	This multifunction pin is sampled by the W83C553F, following the PWRGD active edge. If a 2.2K ohm resistor is weakly pulling this pin to VCC at this time, the W83C553F is in PowerPC mode. If a weak pull down resistor is connected to ground, the chip is in x86 mode. When the PCI arbiter within the W83C553F is enabled (pin 16 Arbdis#/GNT2# is weakly pulled high), this pin functions as the CPU Grant output which allows the system CPU-to-PCI bridge to have access to PCI.
CPUREQ#	9	Input	This input allows the system CPU to request access to the PCI bus in systems with the PCI arbiter within the W83C553F enabled.

Table 2-4. IDE Interface Bus Signals

Pin Name	Pin #	Input/ Output	Description
IDECS0#	87	Output	Drive Chip Select 0. This signal is decoded from the AD bus to select both primary and secondary IDE Port Command Block Registers.
IDECS1#/ NAT/LEG#	86	Input/ Output	Drive Chip Select 1. This signal is decoded from the AD bus to select both primary and secondary IDE Port Auxiliary Registers. Native or Legacy Mode Select. During reset, this pin is sampled as an input to set the Native or Legacy mode of the bus master IDE controller (Function 1). A high selects Native mode and a low selects Legacy mode.
IDEIOWA#	85	Output	Drive I/O Write A. This signal is used jointly with IDECS0# and IDECS1#. The rising edge of IDEIOWA# latches data into the primary port IDE device.
IDEIORA#	83	Output	Drive I/O Read A. This signal is used jointly with IDECS0# and IDECS1#. The falling edge of IDEIORA# enables data from the primary port IDE device. The data is latched internally on the rising edge of IDEIORA#.
IDEIOWB#	84	Output	Drive I/O Write B. This signal is used jointly with IDECS0# and IDECS1#. The rising edge of IDEIOWB# latches data into the secondary port IDE device.
IDEIORB#	82	Output	Drive I/O Read B. This signal is used jointly with IDECS0# and IDECS1#. The falling edge of the IDEIORB# enables data from the secondary port IDE device. The data is latched internally on the rising edge of IDEIORB#.

Table 2-4 (continued). IDE Interface Bus Signals

Pin Name	Pin #	Input/ Output	Description
IDEDRQA	97	Input	DMA Request A. This signal is the primary port DMA handshake from the IDE device. When asserted, it indicates a data transfer is requested.
IDEDAKA#	94	Output	DMA Acknowledge A. This is the primary port DMA handshake to the IDE device. When asserted, it indicates a data transfer can be executed.
IDEDRQB	96	Input	DMA Request B. This is the secondary port DMA handshake from the IDE device. When asserted, it indicates a data transfer is requested.
IDEDAKB#	93	Output	DMA Acknowledge B. This is the secondary port DMA handshake to the IDE device. When asserted, it indicates a data transfer can be executed.
DA[2:0]	88,90,89	Output	IDE Drive Address.
DD[15:0]	98,101,103, 105,108, 110,112, 114,115, 113,111, 109,106, 104,102, 100	Input/ Output	IDE Drive Data. 16-bit bi-directional bus.
IDECHRDY	95	Input	IDE I/O Channel Ready. When IDECHRDY is negated, the current cycle will be extended. This input is connected to the primary port, and can also be connected to the secondary port.
IDEIRQB	91	Input	IDE IRQ B. Secondary port interrupt request.
IDEIRQA	92	Input	IDE IRQ A. Primary port interrupt request.

Table 2-5. ISA Bus Signals

Pin Name	Pin #	Input/ Output	Description
BCLK	200	Output	ISA Bus Clock.
OSC	172	Input	Oscillator. 14 MHz input for generating the internal timer clock.
LA[23:17]	176,178, 180,182, 184,187, 189	Input/ Output	Latchable Address. The current bus owner drives LA[23:17] to provide 16M of memory space.
SA[16:0]	144,145, 147-149, 151,152, 155,158, 160,162, 164,165, 167,169, 171,173	Input/ Output	System Address. SA[16:0] provides the 17 least significant address bits for memory accesses and SA[15:0] provides the entire 16 address bits for I/O accesses.
MASTER#	143	Input	ISA Master. Master control signal from the ISA bus.
REFRESH#	150	Input/ Output	ISA DRAM Refresh Control. This pin is an open drain output and allows other masters to initiate refresh requests.
MEMR#	141	Input/ Output	Memory Read. Acts as an output during PCI master and DMA cycles and as an input during ISA master cycles.
MEMW#	142	Input/ Output	Memory Write. Acts as an output during PCI master and DMA cycles and as an input during ISA master cycles.

Table 2-5 (Continued). ISA Bus Signals

Pin Name	Pin #	Input/ Output	Description
IOR#	140	Input/ Output	I/O Read. Act as an output during PCI master and DMA cycles and as an input during ISA master cycles.
IOW#	139	Input/ Output	I/O Write. Act as an output during PCI master and DMA cycles and as input during ISA master cycles.
SMEMR#	138	Output	Memory Read To Address Below 1M. An external pull-up resistor is required.
SMEMW#	137	Output	Memory Write To Address Below 1M. An external pull-up resistor is required.
ZWS#	132	Input	Zero Wait State. This signal is used by ISA slaves to terminate a transfer cycle before the default ready counter expires.
SBHE#	174	Input/ Output	System Byte High Enable. SBHE# is asserted to indicate that data is being transferred on SD[15:8].
M16#	175	Input/ Output	Memory Cycle 16-Bit Select. This signal is used by memory slaves to indicate 16-bit transfer capability.
IO16#	177	Input	I/O Cycle 16-Bit Select. This signal is used by I/O slaves to indicate 16-bit transfer capability.
IOCHK#	122	Input	I/O Channel Check. This assertion of this signal indicates an error has occurred.

Table 2-5 (Continued). ISA Bus Signals

Pin Name	Pin #	Input/ Output	Description
IOCHRDY	135	Input/ Output	I/O Channel Ready. This signal is used by ISA slaves to extend the transfer cycle beyond the default ready timer expiration.
BALE	168	Output	Bus Address Latch Enable. This signal indicates that a valid address is on the bus.
AEN	136	Output	Address Enable. AEN is asserted during DMA cycles to prevent I/O devices from misinterpreting the cycle as a valid I/O cycle.
TC	166	Output	Termination Count. This signal is asserted to indicate that a DMA channel's word count has reached terminal count.
DRQ[7:5, 3:0]	1,203,198, 191,190, 193,196	Input	DMA Request. DMA service request from the DMA controllers.
DAK[2:0]	194,192, 195	Output	Encoded DMA Acknowledge. The channel number of the arbitration winner is encoded in binary. An external decoder is required to generate DACK[7:5, 3:0]#. The inactive value is 100b.
IRQ[15, 14, 12:9, 7:3]	186,188, 183,181, 179,127, 154,157, 159,161, 163	Input	Interrupt Request.

Table 2-5 (Continued). ISA Bus Signals

Pin Name	Pin #	Input/ Output	Description
PMACT# / ISARST	5	Output	This multi-function pin functions as ISA Reset when the W83C553F is in PowerPC mode, as determined by pin 8 strapping after power-up. It is driven for one millisecond duration after one of the following conditions: - PWRGD active edge - Hot Reset bit set (port 92, bit 0) - Reset Drive bit set (Clock Divisor Register bit 3) ISA Reset is the inverted logical equivalent of PCI Reset. When the W83C553F is in x86 mode, this pin functions as Power Management Active. It is the output signal to the CPU bridge which indicates the system activity status by becoming active when a break event has occurred. Break events are programmed into PCI Configuration Registers index 60h - 63h.
SD[15:0]	208-204, 202,199, 197,123, 125,126, 128-131, 133	Input / Output	Bidirectional Data Bus.

Table 2-6. X Bus Signals

Pin Name	Pin #	Input/ Output	Description
SECURITY / XRD#	116	Output/ Input	X Bus Read. When active "0", data flows from XD to SD. When the W83C553F is in PowerPC mode, this pin is sampled after reset and its value is reflected in bit 2 of the Port 92 register (see page 107).
IRQ1	121	Input	Keyboard Controller Interrupt.
IRQ8#	120	Input	Real Time Clock Interrupt.
XOE#	117	Output/ Input	X Bus Buffer Enable. This signal enables an external X-bus buffer whenever an X-bus device is decoded. This pin is a strap pin, needs a 2.2k Ohm resistor pull up, otherwise will be in test mode.
XCS0/ ROMCS	119	Output	This is a multi-function pin. When the W83C553F is in PowerPC mode, this pin functions as the chip select for an external ROM, using default ISA memory cycle timing. When the W83C553F is in x86 mode, this pin functions as the lower bit of the X-bus Address.
XCS1/X8XCS	118	Output	This is a multi-function pin. When the W83C553F is in PowerPC mode, this pin functions as the chip select for ports in the 800h-8FFh I/O address range. When the W83C553F is in x86 mode, this pin functions as the upper bit of the X-bus Address. In x86 mode, an external decoder is required to decode the chip selects for X-bus devices: XCS[1:0] — Device 00 — Idle 01 — RTC Address Latch 10 — RTC Data Port 11 — ROM/BIOS or Keyboard Controller

Table 2-7. CPU Interface and Miscellaneous Signals

Pin Name	Pin #	Input/ Output	Description
INT	10	Output	Interrupt. Interrupt signal from the W83C553F interrupt controller to the CPU.
NMI	11	Output	Non-Maskable Interrupt.
INIT	3	Output	It functions as Initialize CPU/Software Reset (INIT) when the W83C553F is in x86 mode, as determined by pin 8 strapping after reset. INIT is asserted for four PCI clocks following one of these events: - Hot Reset bit set (port 92, bit 0) - CPU Shutdown Cycle - keyboard Reset Emulation bit is set (bit 1, Index 4E)
SPKR	134	Output	Speaker Data. This output drives an externally buffered speaker.
PWRGD	2	Input	Power good signal from the power supply. This signal is used to generate other reset signals to reset the system.
FERR#/IRQ13	12	Input	This multi-function pin's default function is Interrupt Request 13 (IRQ13). The Numerical Co-processor Error (FERR#) function may be enabled by a bit in the Function 0 PCI Configuration Space AT System Control Register (Index 4Eh, bit 4).
IGNNE# / HRESET#	4	Output	This multi-function pin functions as Ignore Numeric Error (IGNNE#) when the W83C553F is in x86 mode as determined by pin 8 strapping after reset. It functions as HRESET# when the W83C553F is in PowerPC mode. For connection to the PowerPC, HRESET# is asserted for a duration of one millisecond after one of the following events: - PWRGD active edge - Hot Reset bit set (port 92, bit 0) - CPU Shutdown Cycle - Keyboard Reset Emulation bit is set (bit 1, Index 4E)

Table 2-8. Power and Ground Signals

Pin Name	Pin #	Input/ Output	Description
VSS	24,38,48, 68,80, 107,124, 146,156, 170,201	-	These 11 pins are connected to the power supply ground. All VSS pins must be connected for proper device operation.
VDD	14,32,45, 70,99,153,185	-	These 7 pins are connected to the power supply +5V. All VDD pins must be connected for proper device operation.

3.0 SYSTEM ARCHITECTURE

3.1 Overview

The W83C553F is a multi-function PCI device. "Function 0" is the PCI-to-ISA bridge logic; "Function 1" is the bus master IDE controller. Each function has its own separate PCI configuration space and I/O register space.

The W83C553F's bus hierarchy is designed to provide concurrency of operations performed on all buses simultaneously and is structured as follows:

- PCI Bus is primary I/O bus
- ISA Bus is secondary I/O bus

The W83C553F accepts cycles from the PCI bus and translates them onto the ISA bus. It also requests the PCI master bridge to generate PCI cycles on behalf of IDE DMA or an ISA master. The ISA bus interface thus contains a standard ISA Bus Controller and data buffering logic. ISA control includes ISA command generation, I/O recovery control, wait-state insertion, and data buffer routing. Five ISA slots can be supported without external buffering circuitry.

The W83C553F initiates and performs standard ISA bus refreshing. The integrated controller generates the command and refresh address to the ISA bus. Since an ISA refresh is transparent to the PCI bus and the DMA cycle, an arbiter resolves any conflicts among PCI, refresh, and DMA cycles.

IDE data transfers are executed with two specific protocols. The standard protocol is to execute PIO cycles on the PCI bus and the dual IDE interfaces. An enhanced protocol is supported, allowing the W83C553F to transfer data across the PCI bus as a bus master directly to/from memory, and across the dual IDE interfaces with single or multiword DMA cycles. This protocol minimizes CPU overhead while maximizing the PCI bus bandwidth.

All IDE PIO protocol data transfers (8-bit, 16-bit and 32-bit) are automatically detected and supported. Read ahead can be enabled for each individual device for 16-bit and 32-bit I/O read operations. This allows the controller to execute additional IDE read cycles while the host is completing the previous memory write. Posted writes can be enabled for each individual device for 16-bit and 32-bit I/O write operations which allow the IDE controller to complete the present write cycle while the host executes the next system memory read operation maximizing the disk sub-system performance while reducing system overhead.

Bus Master data/command transfers are supported as defined in the proposed PCI "Programming Interface for Bus Master IDE Controller" specification Rev. 1.0 (SFF8038i). This allows the system microprocessor to be freed from the task of manually transferring data between the IDE controller and the system memory as is required by the standard PIO protocol. In a multitasking environment, the system CPU can perform other tasks with the maximum PCI bus bandwidth available while data transfers are executed by the W83C553F.

The IDE interface is fully ANSI CAM compliant to the ATA Revision 3.0 and the ATA-2 specifications. Each storage device on the two ports is individually programmable to select the desired command on and off times to support ATA defined PIO MODES 0 through 2 and Multiword DMA MODE 0. Also supported are SFF PIO MODES 3, 4 and 5 (proposed) and Multiword DMA MODES 1 and 2.

The devices supported are ATA compliant hard disks, tape drives, and CD ROMs. The W83C553F is compliant with the emerging ATAPI Specification.

Two interrupt controllers can handle a total of 15 interrupt channels. IRQ0 is internally connected to OUT0, of the 82C54 counter/timer. Usually an interrupt is generated by the rising edge of IRQ. IRQ8 and IRQ13, however, are fixed to trigger on the falling edge for direct connection to the real time clock interrupt or Pentium CPU floating point error signal. RX 4D0h and RX4D1h can be programmed to change the IRQs from edge sensitive to level sensitive interrupts. All external IRQ lines are not internally pulled-up. I/O port and channel definition matches the IBM PC/AT requirement.

Types A, B, F DMA are supported by the W83C553F. Two integrated 82C37A DMA controllers each generate memory addresses and control signals to transfer information between a peripheral device and memory, without CPU intervention. Four DMA channels permit 8-bit peripheral device data transfers. Three channels permit 16-bit peripheral device data transfers. During a DMA or master cycle, the CPU is held and the W83C553F takes control. Both DMA controllers support scatter/gather transfer capability on all channels and 32-bit addressing.

The W83C553F has two basic operational states: reset and active. The reset state brings all internal logic to a known state, and configures some chip features. The active state is the normal operating state that allows software to perform chip configuration, access to the PCI and ISA register sets, and accessing of up to four IDE devices.

3.2 Active State

When active, the W83C553F will monitor all PCI bus cycles and respond to configuration and I/O cycles. The W83C553F will always respond to configuration cycles when properly addressed but will always respond to I/O cycles, as indicated in the internal configuration registers.

Configuration cycles are executed anytime the W83C553F IDSEL pin is asserted, a valid command is detected, and AD[1:0] are "0" during the address phase. Configuration cycles are executed to program the W83C553F internal configuration register sets. I/O cycles will only be executed when enabled as indicated in the configuration registers. I/O cycles are used to transfer command/status and data to/from the IDE devices, as well as to program the bus master register set.

Four basic data paths are provided. One provides the timing and control functions for 8-bit I/O cycles that communicate control/status information with the IDE devices. A second data path provides the timing and control functions for 16-bit and 32-bit I/O cycles that are used to transfer data to/from the IDE drives with the PIO protocol. The third is used to access the internal Configuration and Bus Master IDE Register set. The fourth data path is used for the bus master data transfer protocol. A block of logic is used to interface to the PCI bus as well as separate 8-bit from 16/32-bit cycles and provide bus master support. A separate block of logic is used to control the IDE interface and timing as well as control the packing and unpacking of the data between the IDE buffer logic and the PCI buffer logic.

3.3 Bus Structures

Table 3-1. Address and Data Paths for Basic Cycles

Cycle	Address Bus Path	Data Bus Path
ISA-to-PCI data read	PCI address/data->W83C553F ->Latched & ISA addressing	ISA data->W83C553F->PCI address/data
PCI-to-ISA data write	PCI address/data->W83C553F ->Latched & ISA addressing	PCI address/data->W83C553F ->ISA data
DMA read	W83C553F->PCI address/data, W83C553F->Latched & ISA address	PCI address/data->W83C553F ->ISA data
DMA write	W83C553F->PCI address/data, W83C553F->Latched & ISA address	ISA data->W83C553F->PCI address/data
ISA refresh	W83C553F->ISA address	

3.4 PCI-to-ISA Bridge

The W83C553F PCI System I/O provides the PCI bus interface functions. It contains both PCI master and slave bus bridging. When PIBGNT# is asserted, the master bridge translates an ISA master or DMA cycle to the PCI bus, based on the ISA Address Decoder status. When PIBGNT# is de-asserted, the slave bridge accepts these cycles, initiated from the PCI bus, and targeted to the W83C553F's internal registers or ISA bus. The PCI Address Decoder supports the slave bridge in processing the PCI master initiated cycles. The cycles are then forwarded to the ISA bus interface for translation onto the ISA bus.

As a PCI slave, the W83C553F responds to both I/O and memory transactions. It always target-terminates after the first data phase of a bursting cycle. It also converts a single interrupt acknowledge cycle into two cycles for the two internal 82C59s.

The W83C553F functions as the subtractive decoder in a PCI/ISA system by accepting all accesses not positively decoded by some other device. This function only applies to the low 64 K I/O or low 16 M memory accesses.

The W83C553F positively decodes I/O addresses for internal registers by asserting DEVSEL# on the medium timing. In the x86 mode, the keyboard controller and RTC are subtractively decoded.

As long as PIBGNT# is asserted, the PCI master bridge, on behalf of DMA devices or ISA Masters, drives the PCI address/data, C/BE[3:0]# and PAR signals. When MEMR# or MEMW# is asserted, the W83C553F sends FRAME# and IRDY# to the PCI bus if the targeted memory is not on the ISA side. Addresses and commands are valid during the address phase, while PAR is asserted one clock later. The W83C553F always activates FRAME# for 2 PCLKs because it does not conduct bursting cycles for PCI-to-ISA reads or writes.

The ISA Address Decoder determines the destination of the ISA master or DMA devices. It provides the following options, as defined in Registers 48h to 4Bh:

- Memory space 0 - 512KB
- Memory space 512 KB - 640 KB
- Video Buffer memory space 640 KB - 768 KB
- Expansion ROM memory space 768 KB - 896 KB, in eight 16 KB sections
- Lower BIOS memory space 896 KB - 960 KB
- Memory space within 1 MB - x MB - 16 MB. Not accessible to the PCI bus.
- Memory space less than 16 MB automatically forwards to the PCI.

3.5 PCI Bus Cycles

The PCI bus cycle can be split into two phases, the address phase and the data phase. The address phase of a PCI cycle is defined as the first rising clock edge when FRAME# is asserted. On this clock edge, C/BE[3:0]# contains the bus command that defines the PCI bus cycle, AD [31:0] contains a valid address, and IDSEL will be stable and valid if it is a configuration cycle. All subsequent clocks comprise the data phase until the cycle is complete. If this cycle is claimed, DEVSEL# will be asserted.

The next rising clock edge identifies the beginning of the data phase. Address parity is valid and will be checked or ignored depending on the state of the SE bit of the Device Control Register. The data phase can last one or more clock cycles. Data will be transferred on the rising clock edge when both IRDY# and TRDY# are asserted. Data parity will be generated (slave I/O read or bus master memory write cycle) or checked (slave I/O write or bus master memory read cycle) on the next rising clock edge. The W83C553F will report data parity errors on slave I/O write cycles it claims (by the assertion of DEVSEL#) and bus master memory write cycles via the PERR# signal when enabled.

Normally for I/O cycles FRAME# will be de-asserted when IRDY# is asserted to signify that this is the last data transfer of the data phase. STOP# will also be asserted with TRDY# to prevent I/O bursting. Multiple data phases (data bursting) are supported when operating as a bus master.

Table 3-2 PCI Bus Cycles

C/BE[3:0]#	PCI Bus Cycle	Slave Mode	Master Mode
0 0 0 0	Interrupt Acknowledge	Supported	Not Generated
0 0 0 1	Special Cycle	Supported	Not Generated
0 0 1 0	I/O Read	Supported	Not Generated
0 0 1 1	I/O Write	Supported	Not Generated
0 1 0 0	Reserved	Ignored	Not Generated
0 1 0 1	Reserved	Ignored	Not Generated
0 1 1 0	Memory Read	Supported	Supported
0 1 1 1	Memory Write	Supported	Supported
1 0 0 0	Reserved	Ignored	Not Generated
1 0 0 1	Reserved	Ignored	Not Generated
1 0 1 0	Configuration Read	Supported	Not Generated
1 0 1 1	Configuration Write	Supported	Not Generated
1 1 0 0	Memory Read Multiple	Supported (aliased to Memory Read)	Supported
1 1 0 1	Dual Address Cycle	Ignored	Not Generated
1 1 1 0	Memory Read Line	Supported (aliased to Memory Read)	Supported
1 1 1 1	Memory Write and Invalidate	Supported (aliased to Memory Write)	Supported

Refer to Figure 3-1. Bus acquisition timing cycles are defined by the C/BE[3:0]# command lines during the address (AD) phase of each PCI cycle.

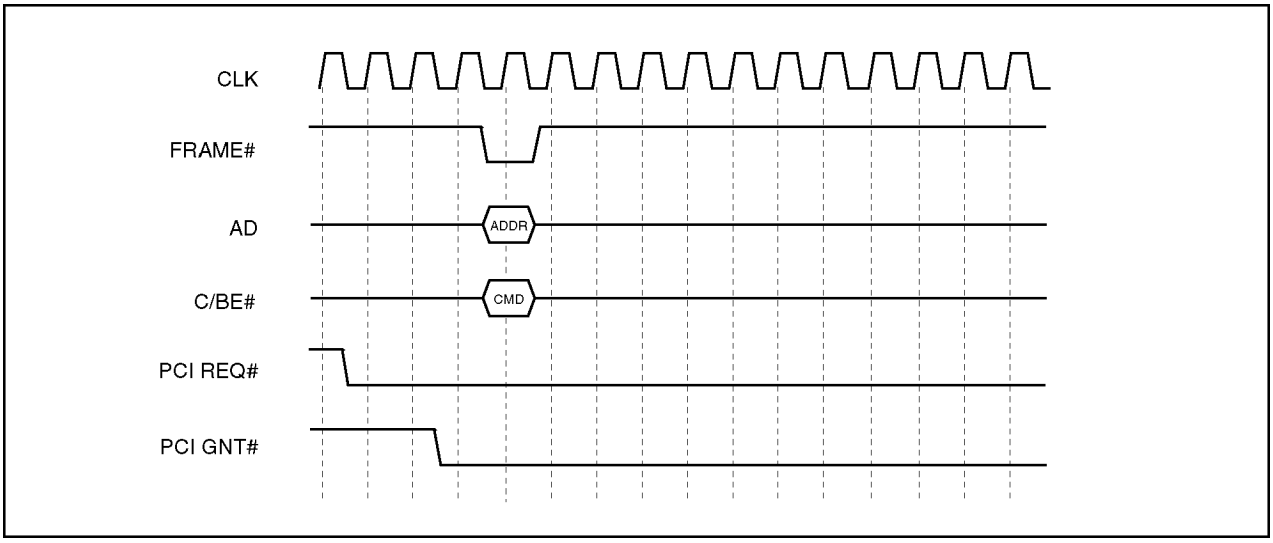

Figure 3-1. Bus Acquisition Timing

3.6 PCI I/O Read Cycle

Bursting is not supported by the W83C553F for I/O cycles, so a target disconnect will be executed after the first data transfer on all I/O Read commands to prevent multiple I/O data phases.

Refer to Figure 3-2. The Slave I/O Read command (C/BE[3:0]# = 2h during address phase) is used by the processor to read the W83C553F internal bus master registers, IDE device, and ISA registers or X-bus registers. It is a single, non-burst, 8, 16 or 32-bit transfer cycle, initiated by the CPU. It is a fixed duration, i.e. the W83C553F will assert TRDY# on the 4th bus cycle of the transfer when accessing the internal bus master registers. It will have a variable duration when accessing an IDE device or ISA register.

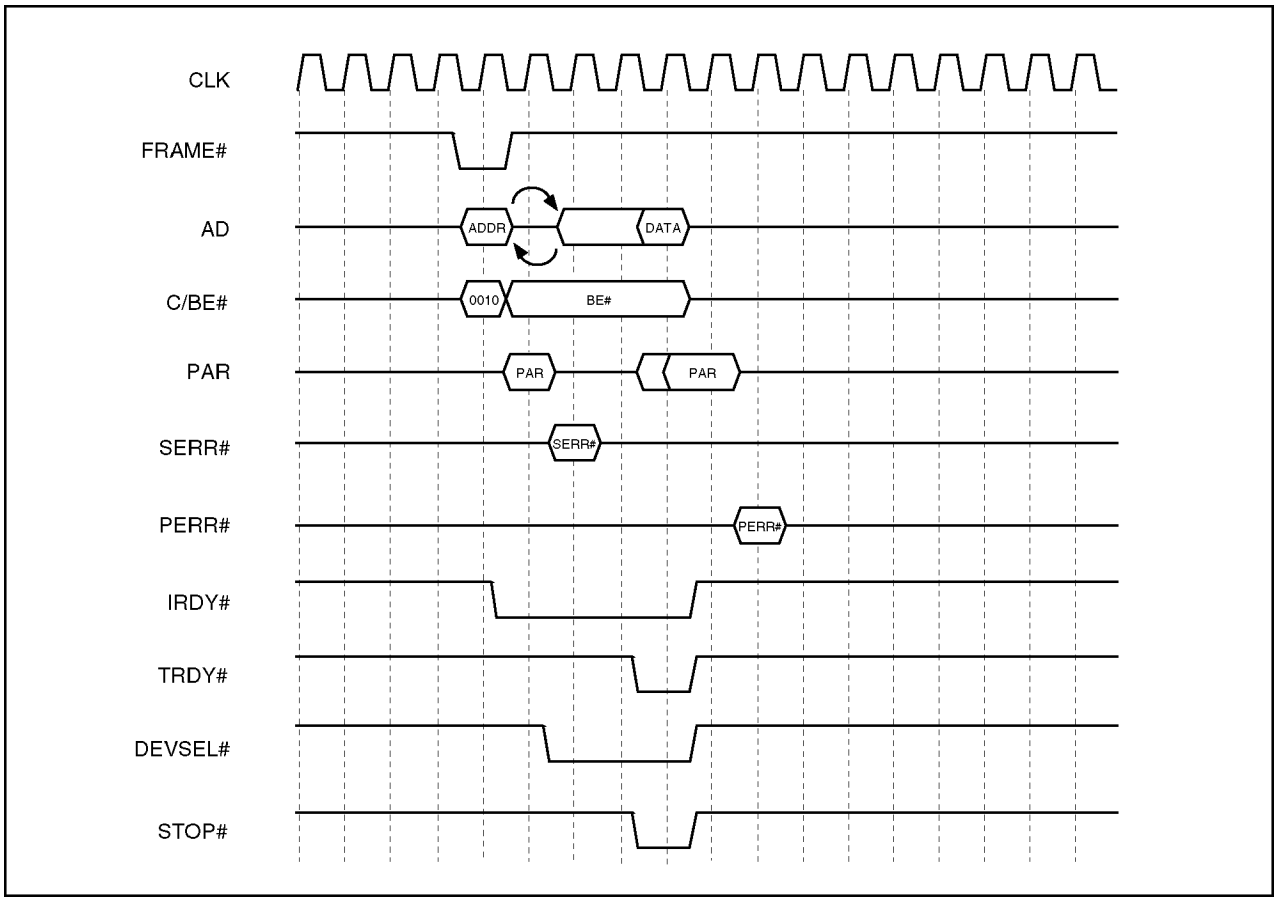

Figure 3-2. Slave I/O Read Timing

3.7 PCI I/O Write Cycle

Bursting is not supported by the W83C553F for I/O cycles, so a target disconnect will be executed after the first data transfer on all I/O Write commands to prevent multiple I/O data phases.

Refer to Figure 3-3. The Slave I/O Write command (C/BE[3:0]# = 3h during address phase) is used by the processor to write the W83C553F internal bus master registers, IDE device, and ISA registers or X-bus registers. It is a single, non-burst, 8, 16 or 32-bit transfer cycle, initiated by the CPU. It is a fixed duration, i.e. the W83C553F will assert TRDY# on the 4th bus cycle of the transfer when accessing the internal bus master registers. It will have a variable duration when accessing an IDE device or ISA register.

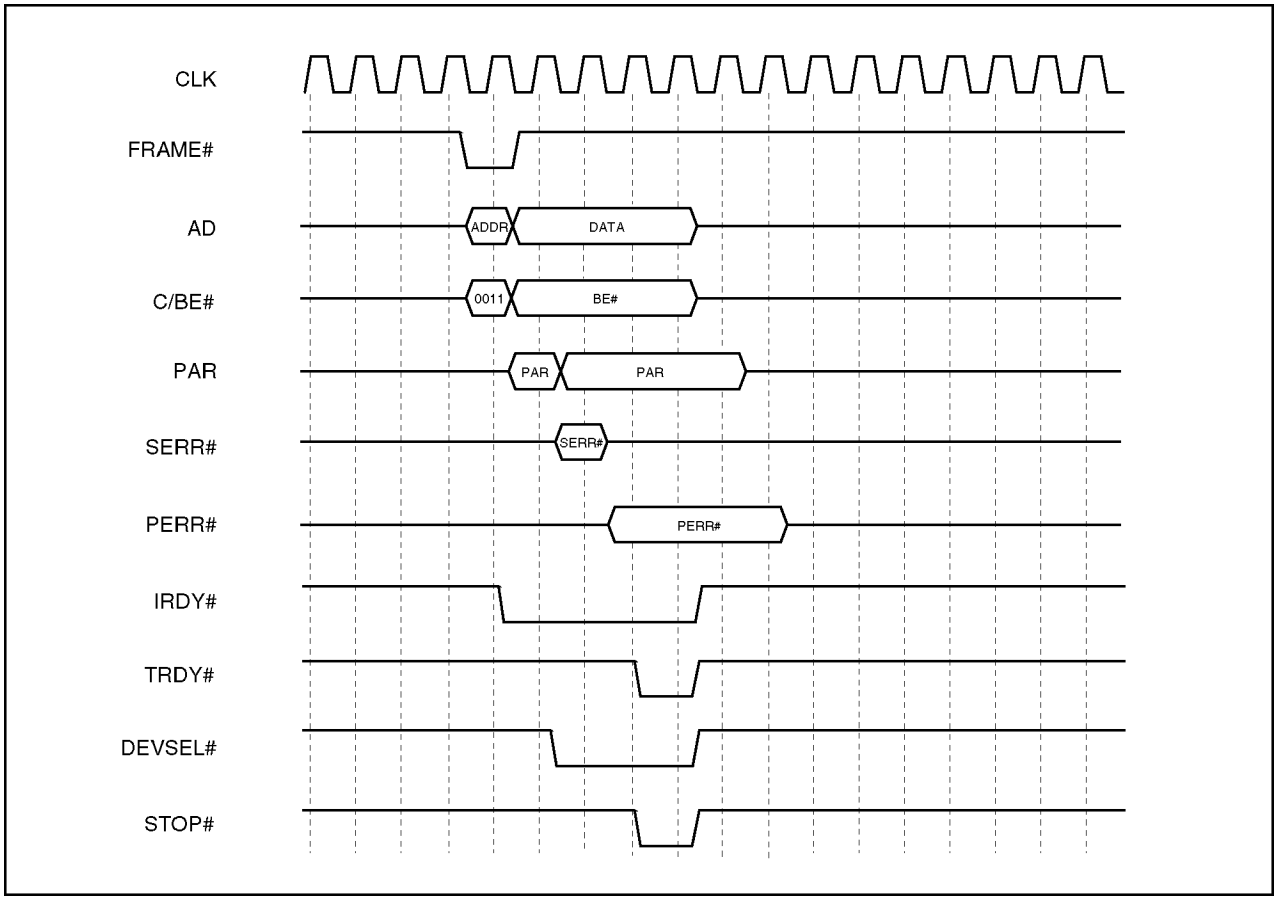

Figure 3-3. Slave I/O Write Timing

3.8 PCI Configuration Read Cycle

The Configuration Read command (C/BE[3:0]# = Ah during address phase) is used in slave mode to read the configuration registers. 8-bit, 16-bit, 24-bit and 32-bit accesses are supported when the IDSEL is asserted and AD[1:0] are 00. The PCI controller will respond to all Configuration Read cycles, even for bytes not used. A value of 00h will be read for each invalid byte selected in the configuration address space. During the PCI address phase AD[7:2] define the DWORD accessed, while the byte enables (C/BE[3:0]#) address the byte(s) within each DWORD.

Refer to Figure 3-4. The Slave Configuration Read command cycle is used by the host processor to read the PCI configuration space in the W83C553F. This provides the processor with device information. It is a single, non-burst, 8, 16 or 32-bit transfer, of fixed duration, i.e. the W83C553F will assert TRDY# on the 4th bus cycle of the transfer.

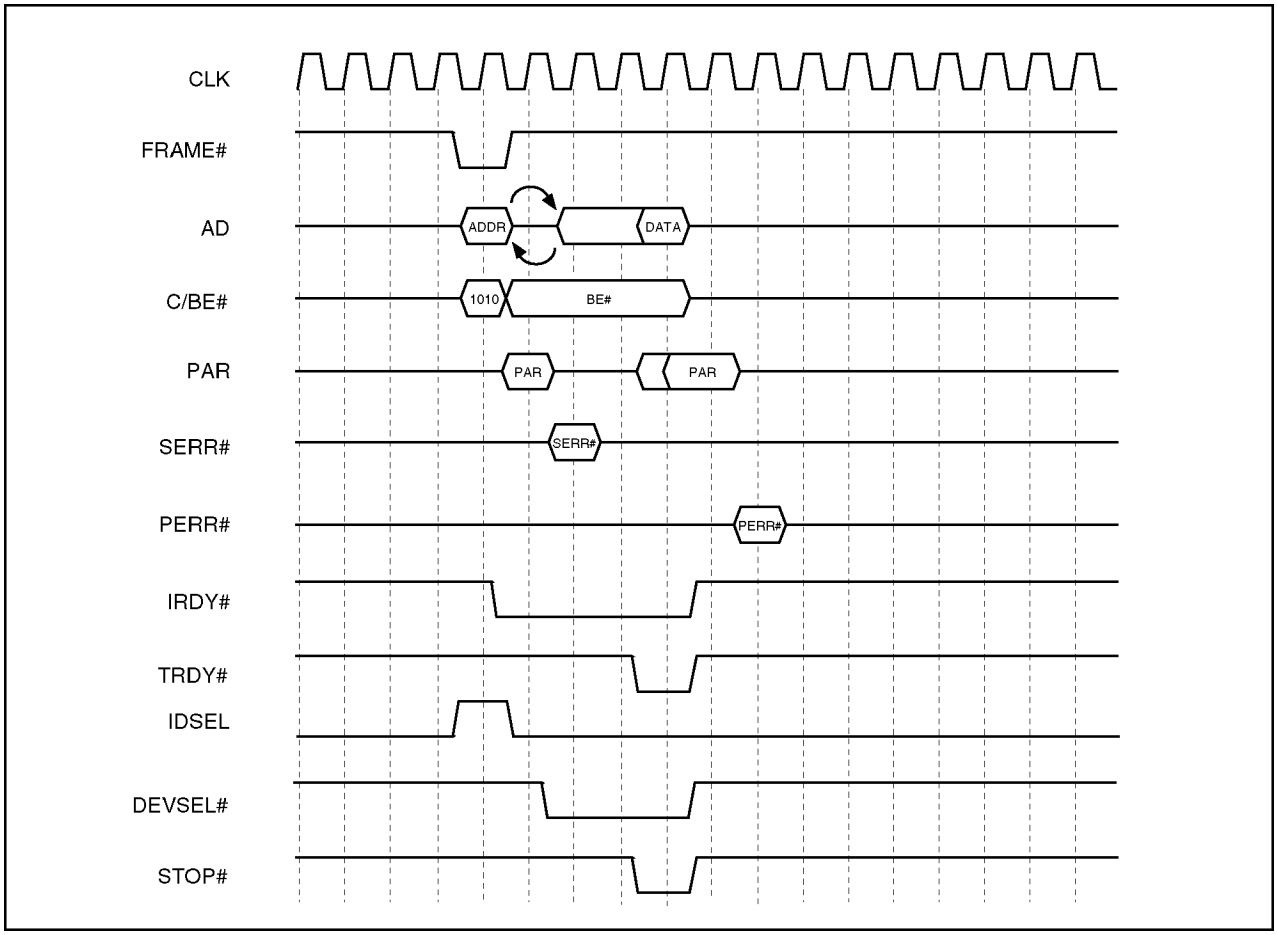

Figure 3-4. Slave Configuration Read Timing

3.9 PCI Configuration Write Cycle

The Configuration Write command (C/BE[3:0]# = Bh during address phase) is used in slave mode to write to the configuration registers. 8-bit, 16-bit, 24-bit and 32-bit accesses are supported when the IDSEL is asserted and AD[1:0] are 00. The PCI controller will respond to all Configuration write cycles, even for bytes not used. During the PCI address phase AD[7:2] define the DWORD accessed, while the byte enables (C/BE[3:0]#) address the byte(s) within each DWORD.

Refer to Figure 3-5. The Slave Configuration Write command cycle is used by the host processor to write the PCI configuration space in the W83C553F. This permits the processor to control basic W83C553F activity, such as enable/disable, change I/O location, etc. It is a single, non-burst, 8, 16 or 32-bit transfer, of fixed duration, i.e. the W83C553F will assert TRDY# on the 4th bus cycle of the transfer.

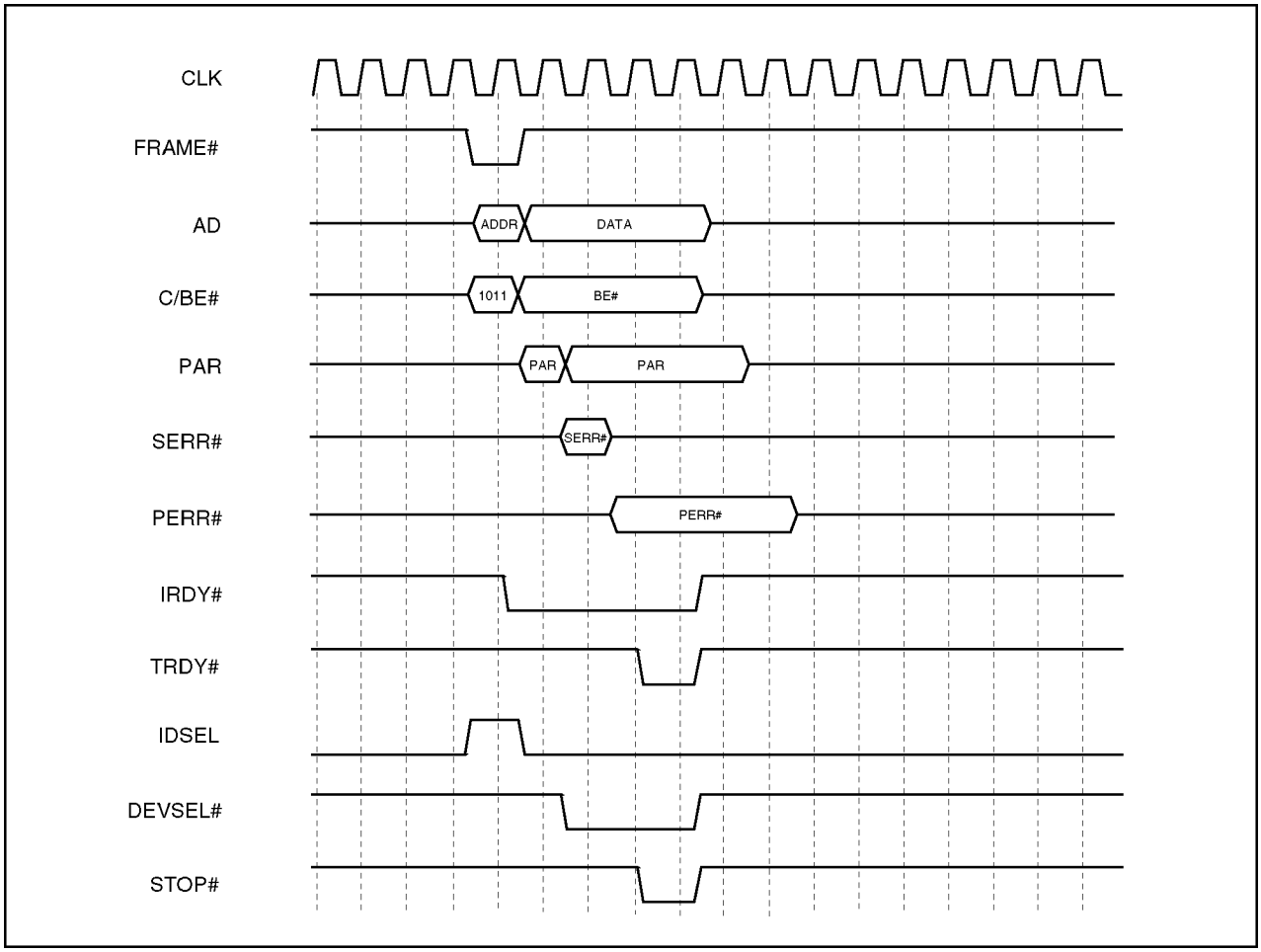

Figure 3-5. Slave Configuration Write Timing

3.10 PCI Memory Read

The Memory Read command (C/BE[3:0]# = 6h during the address phase) is only used when operating as a bus master. It will be used when transferring data to memory and the number of data phases is one half or less of the value programmed to the Cache Line Size Register, or when reading less than 2 Dwords from memory. If the device needs to read more than 2 Dwords from memory, the Memory Read Line command is used. During the Memory Read cycle, the W83C553F issues a PCI REQ# for the bus and, when PCI GNT# is asserted, reads one Dword from system memory. The bus is then released. The data phase in Figure 3-6 takes two clock cycles, as determined by TRDY#. The W83C553F activates all byte enables, even if some byte lanes do not contain valid data. It internally discards unnecessary bytes.

In slave mode, PCI-to-ISA memory reads are supported.

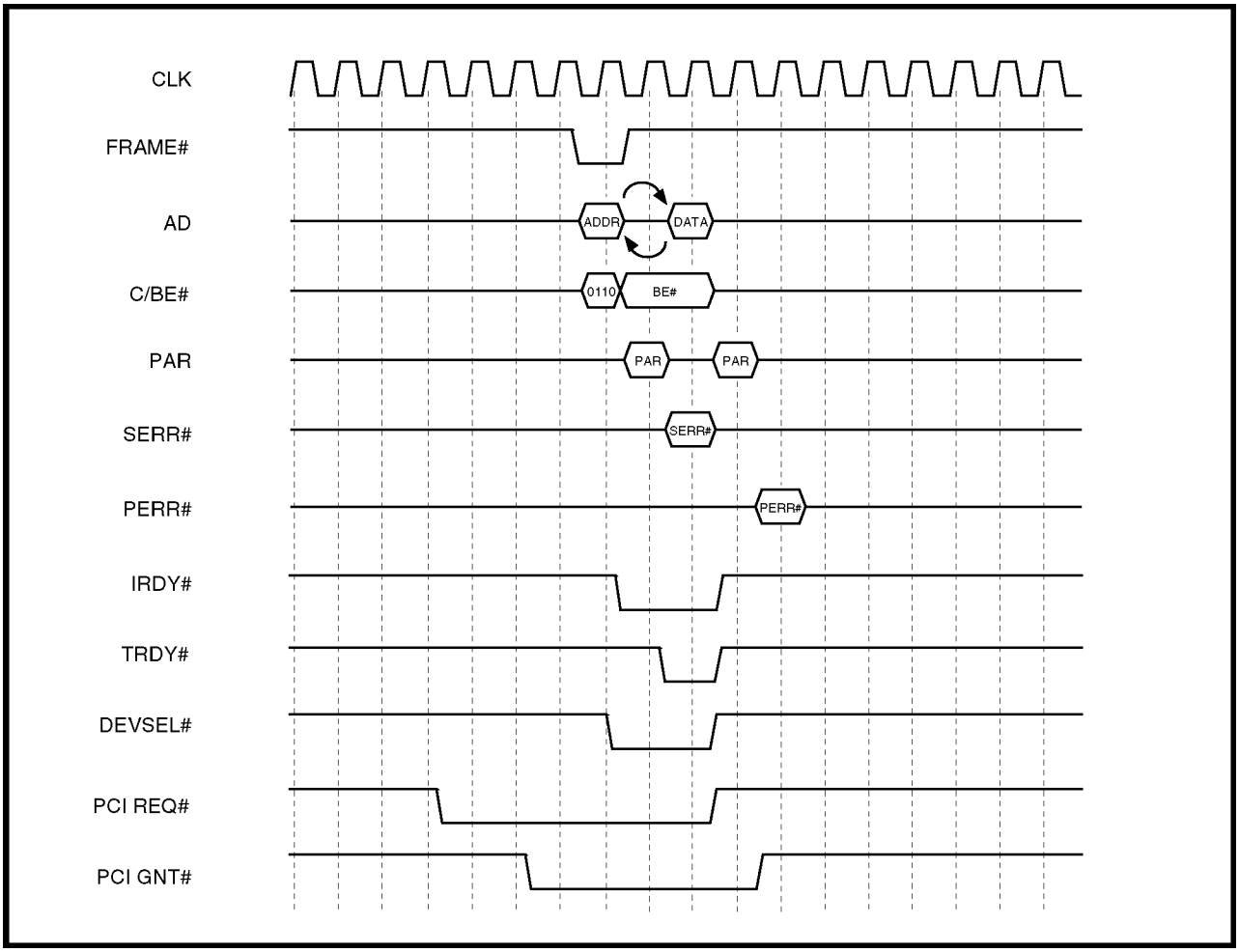

Figure 3-6. Master Memory Read Timing

3.11 PCI Memory Write

The Master Memory Write command (C/BE[3:0]# = 7h during the address phase) cycle is used by the W83C553F when writing to memory. The W83C553F issues a request for the bus and, when granted access, writes one Dword to system memory. The bus is then released. The data phase in Figure 3-7 takes two clock cycles, as determined by TRDY#.

In slave mode, PCI-to-ISA memory writes and ROM writes are supported.

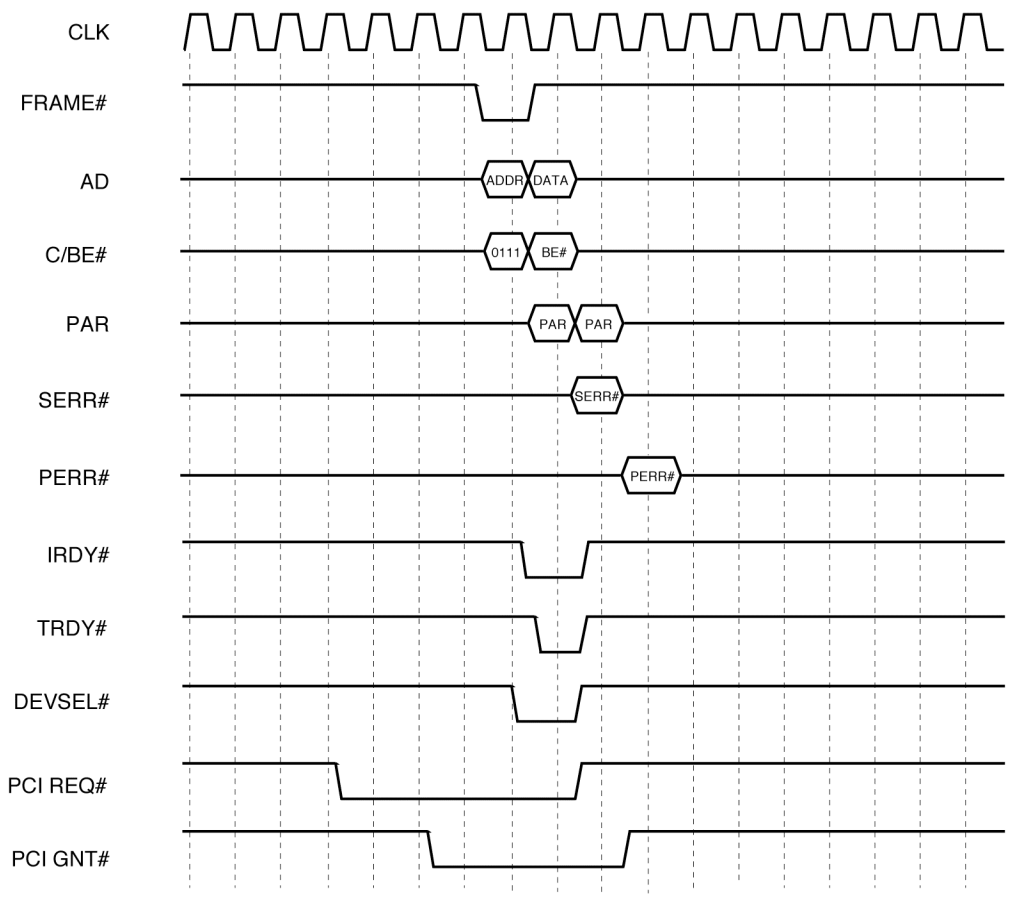

DEVSEL# is sampled by the W83C553F

Figure 3-7. Master Memory Write Timing

3.12 PCI Memory Read Line

The Memory Read Line command (C/BE[3:0]# = Eh during the address phase) is only used when operating as a bus master. It will be used when transferring data to memory and the number of data phases is at least two double words and is greater than one half of the value programmed to the Cache Line Size Register.

In Figure 3-8, the W83C553F issues a request for the bus and, when access is granted, reads eight Dwords from system memory before releasing the bus. All data phases in this figure take one clock cycle, as determined by TRDY#.

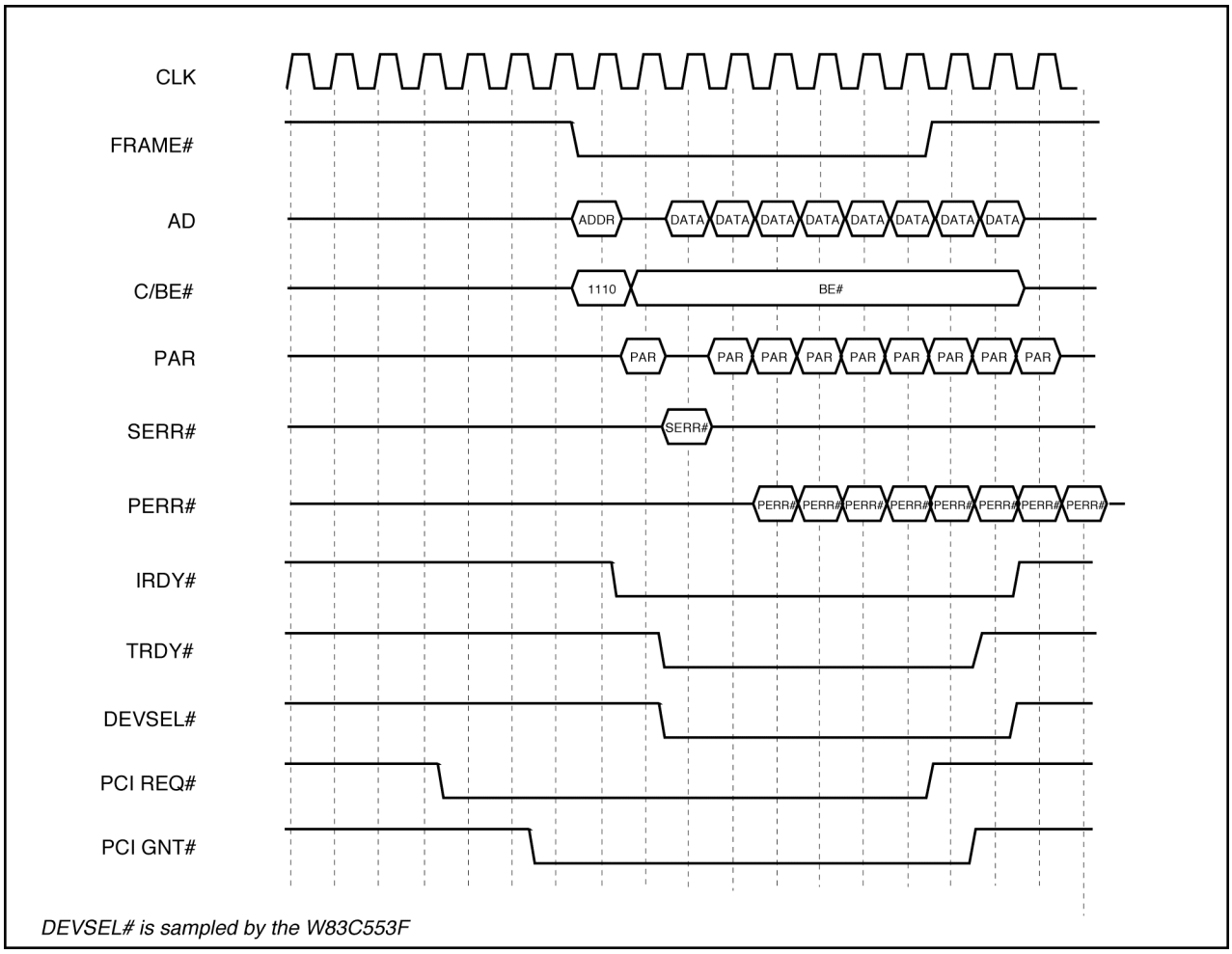

Figure 3-8. Master Memory Read Line Timing

3.13 PCI Memory Write and Invalidate

The Memory Write and Invalidate command (C/BE[3:0]# = Fh during the address phase) is only used when operating as a bus master and enabled as indicated by the state of the MWIEN bit of the Device Control Register. It will be used when transferring data from memory and entire cache line(s) will be written (as programmed to the Cache Line Size Register).

3.14 Transaction Termination

The termination of a PCI transaction can be initiated by either the master or target. During termination, the master controls the completion of all PCI transactions, regardless of what caused the termination. All transactions are concluded when FRAME# and IRDY# are de-asserted, indicating an IDLE cycle.

When the W83C553F is a bus master, its PCI bus cycles may be terminated by the target as a Disconnect With Data Transfer, Disconnect Without Data Transfer, or Target Abort. The W83C553F's PCI bus cycles may also be terminated by the W83C553F itself as a Preemption or a Master Abort.

3.14.1 PCI Disconnect With Data Transfer Timing

The Disconnect With Data Transfer command cycle of Figure 3-9 shows one last data transfer occurring after the target asserts STOP# to start the termination sequence. The data is still transferred, since IRDY# and TRDY# are asserted. The W83C553F terminates the current transfer with de-assertion of FRAME#, and the de-assertion of IRDY#, at which point it releases the bus. The W83C553F will re-request the bus after two clock cycles if more data is to be transferred. The starting address of the new transfer will be the address of the next untransferred data.

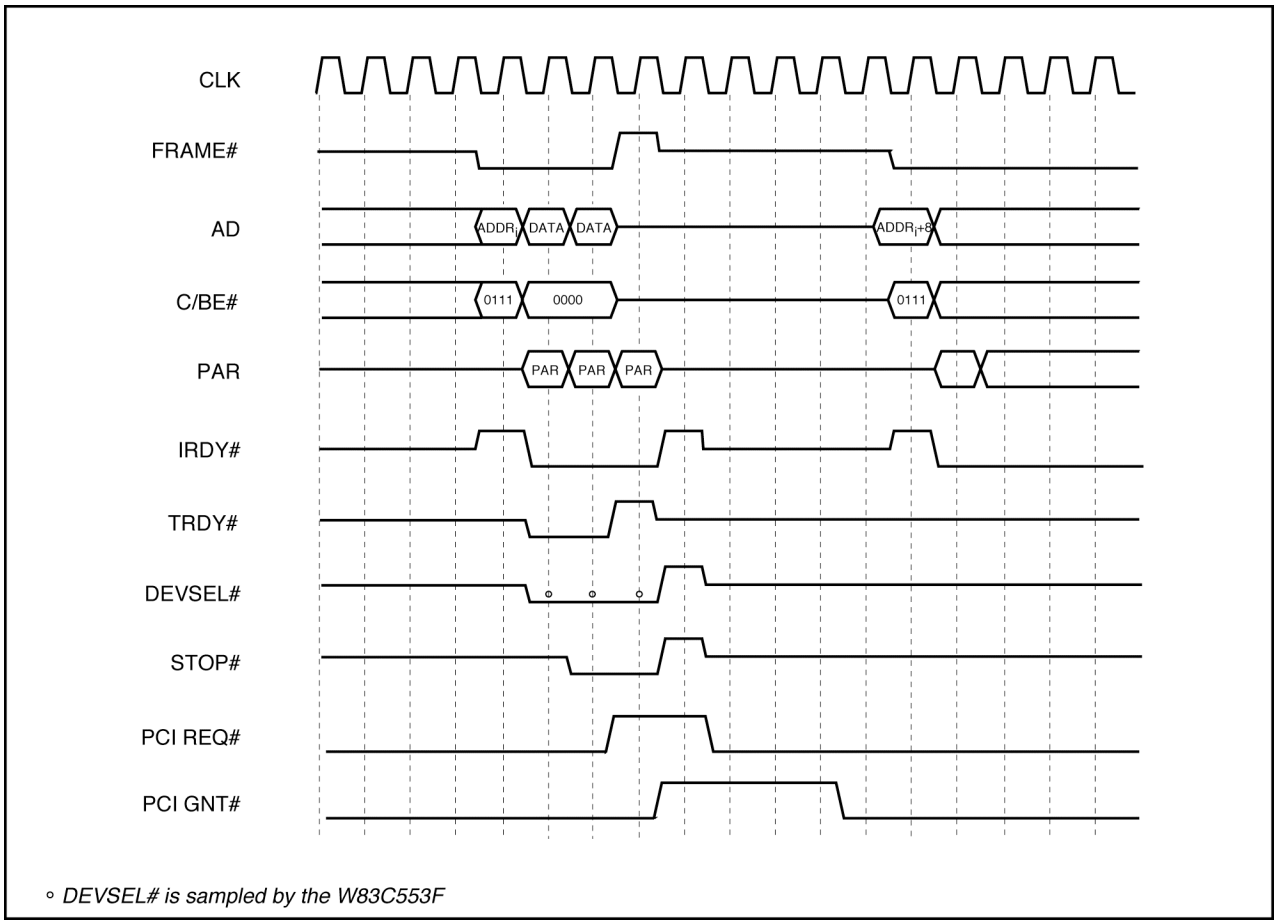

Figure 3-9. Disconnect With Data Transfer Timing

3.14.2 PCI Disconnect Without Data Transfer Timing

The Disconnect Without Data Transfer command cycle of Figure 3-10 shows a target disconnect when no data is transferred. STOP# is asserted without TRDY# being asserted at the same time. The W83C553F terminates the current transfer with de-assertion of FRAME#, and the de-assertion of IRDY#, at which point it releases the bus. The W83C553F will re-request the bus after two clock cycles if more data is to be transferred. The starting address of the new transfer will be the address of the next untransferred data (i.e. the address that the data would have been transferred to had the disconnect not occurred).

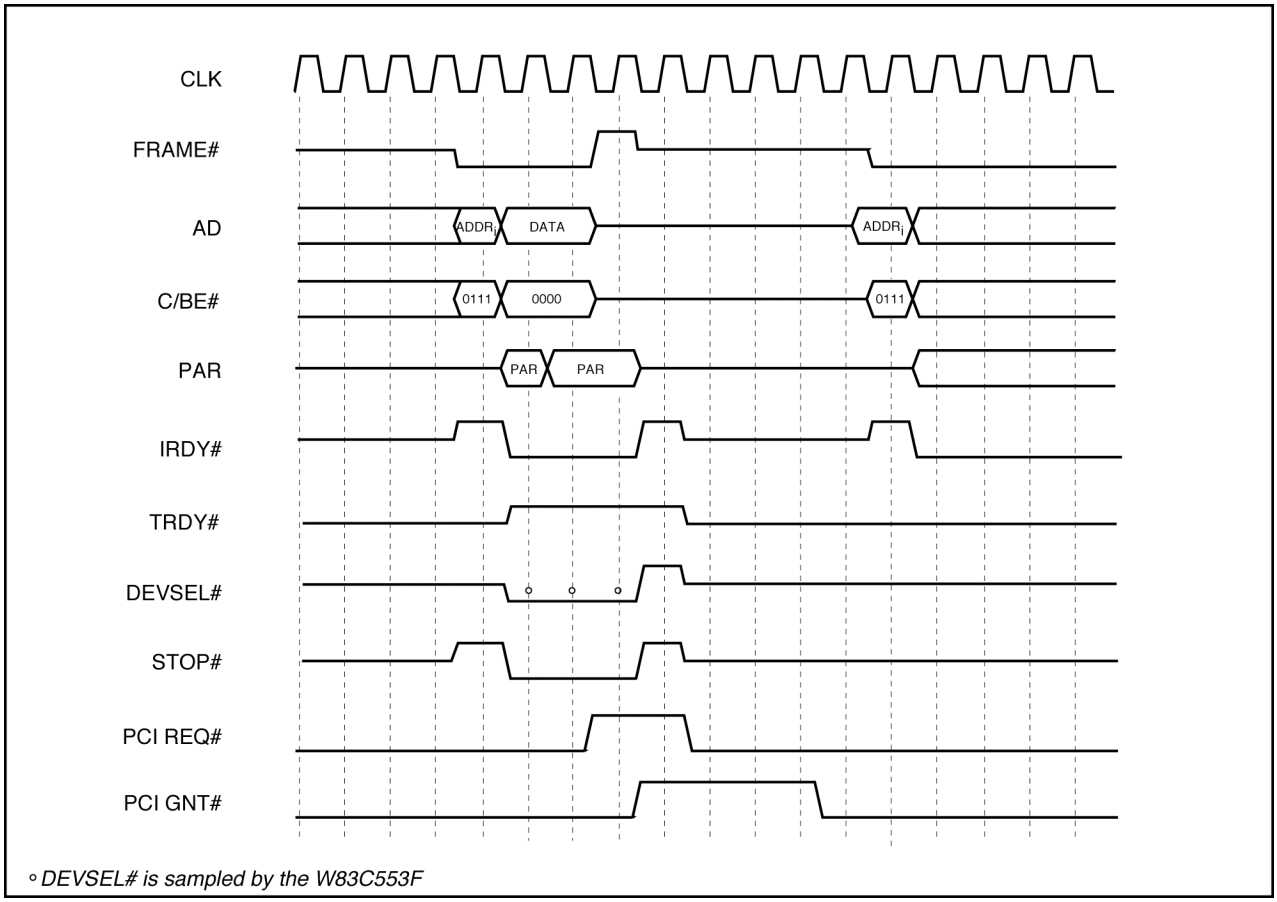

Figure 3-10. Disconnect Without Data Transfer Timing

3.14.3 PCI Target Abort Timing

The Target Abort cycle of Figure 3-11 starts when the target asserts DEVSEL# for one clock, then de-asserts DEVSEL# and asserts STOP#. A target can use this sequence to indicate it cannot service the data transfer, and does not want the transaction retried. The W83C553F cannot assume any data transfers in the current transaction were successful. It terminates the current transfer with the de-assertion of FRAME#, and IRDY#. Since data integrity is not guaranteed, the W83C553F cannot recover from a target abort event. Any on-going IDE activity will be stopped immediately, and an interrupt will be generated if enabled. Abort and Error bits in the DMA Status register will be set. The PCI Configuration registers will not be cleared. The PCI Configuration Space Status Register's RTA bit will be set to indicate the W83C553F has received a Target Abort.

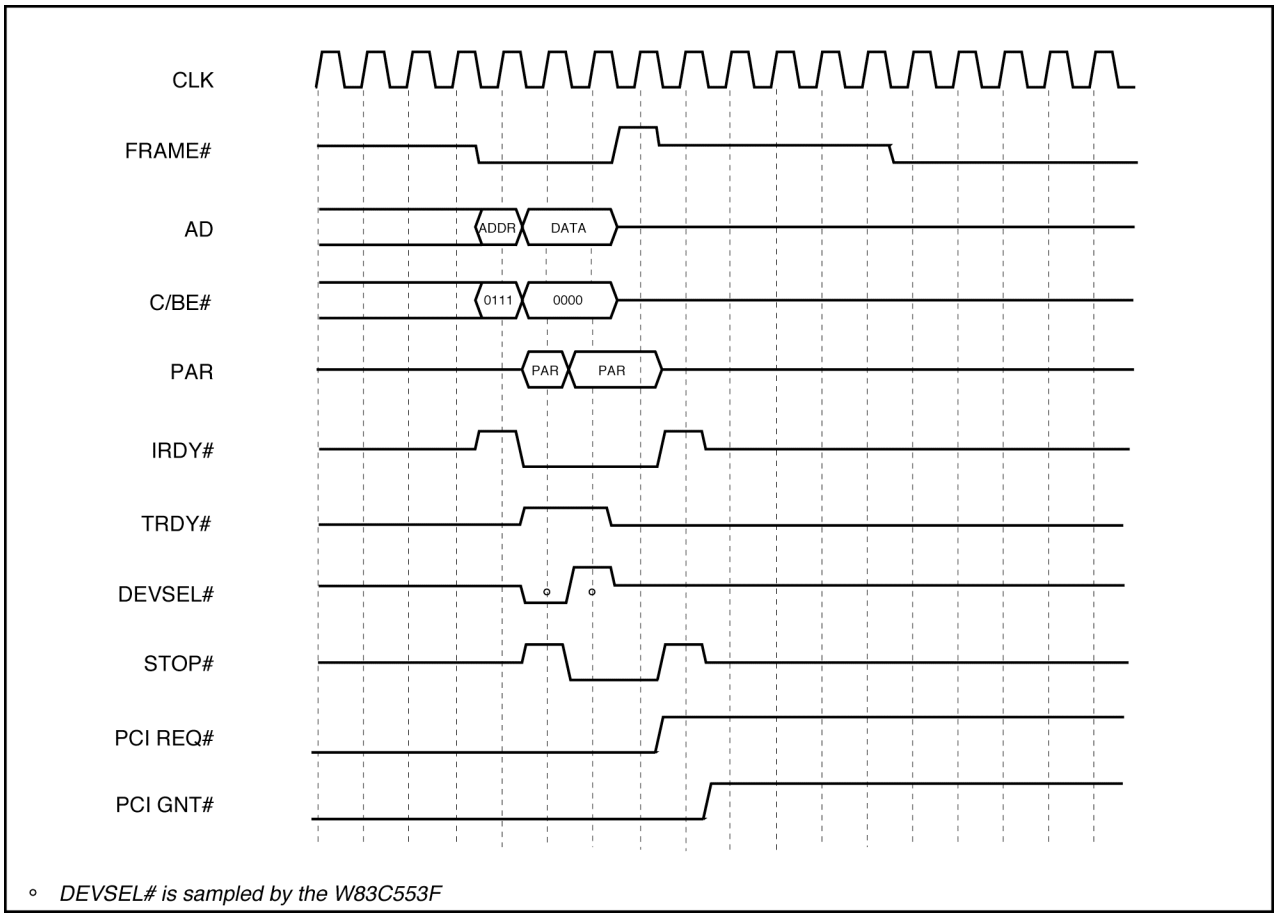

Figure 3-11. Target Abort Timing

3.14.4 PCI Preemption Timing

The main arbiter can void the PCI GNT# signal sent to the W83C553F, if the current bus cycle takes too long, as in the case of DMA bursts. When PCI GNT# is removed, and the value in the Latency Timer Register has reached zero, the W83C553F will finish the current transfer, and immediately release the bus. The timer in the W83C553F PCI configuration space is programmable. The W83C553F will keep PCI REQ# asserted to regain bus ownership.

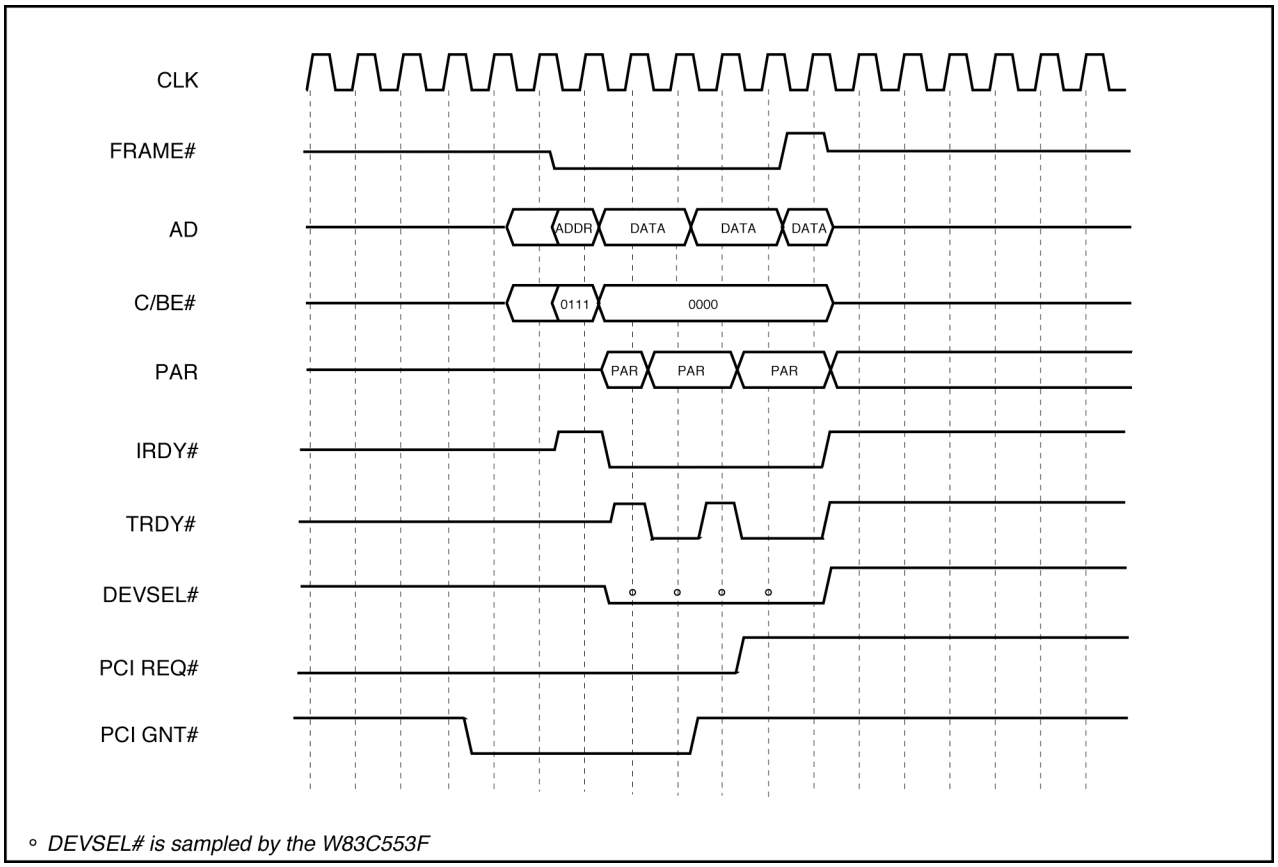

Figure 3-12. Preemption Timing

3.14.5 PCI Master Abort Timing

A Master Abort sequence is initiated by the W83C553F to abort its cycle if DEVSEL# is not asserted within four clocks after FRAME# is asserted. This sequence is treated as a fatal error. Any IDE activity will be terminated immediately. An NMI will be generated if programmed in register 40h, bit 0 (page 58.) The DMA Status Register's Abort and Error bits will be set. The PCI Configuration Registers will not be cleared. The PCI Configuration Space Status Register's MA bit will also be set, to indicate the W83C553F has terminated its transaction using a Master Abort cycle.

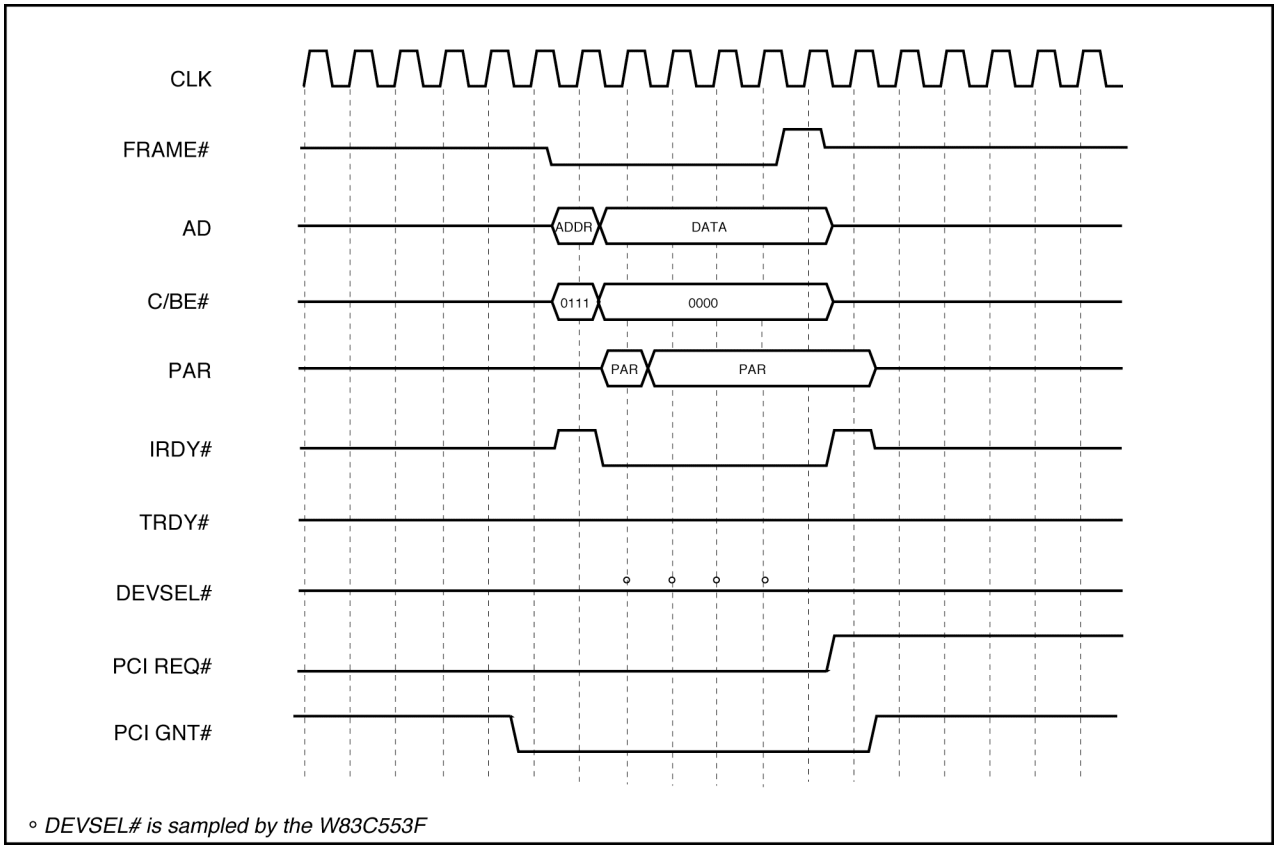

Figure 3-13. Master Abort Timing

3.15 IDE Interface Operation

Operation of the IDE interface is controlled by the configuration registers. Port 0 (Primary Port) and Port 1 (Secondary Port) have the same features, capabilities and configuration options. All 8-bit timing is fixed. The following table shows the 8-bit fixed timing.

Although the 16-bit timing (host cycle 16/32-bit) is programmable on a cycle basis (on/off time), most of the 16-bit cycle timing is also fixed. Address setup, address hold, and data hold (write) times will be the same as for the 8-bit cycles. Data setup time will be equal to the write command on time. This allows the user to only program the command on/off times to select PIO Mode 0, 1, 2, 3, 4 or 5 (proposed), and DMA Single and Multiword 0, 1 or 2 timing.

Much of the DMA mode timing is also fixed. When DMA transfers are executed on the IDE interface, the selected ports' chip selects (IDECS0# and IDECS1# for primary and secondary) will be de-asserted (high) when the BMEN bit in the associated Bus Master Control Register is set to "1." When the IDE device asserts IDEDRQ[A:B], the W83C553F will immediately assert IDEDAK[A:B]# if BMEN is set. One clock later the IDEIOW[A:B]# or IDEIOR[A:B]# output will be asserted. For multiword DMA transfers, the IDEIOW[A:B]# or IDEIOR[A:B]# signal will free run at the programmed rate as long as DRQ remains asserted and the W83C553F is prepared to complete a data transfer. If IDEDRQ[A:B] has not de-asserted by the rising edge of the IDEIOW[A:B]# or IDEIOR[A:B]# signal multiword DMA is assumed and at least one more cycle will be executed. If DRQ de-asserts at any time after IDEDAK[A:B]# is asserted but before IDEIOW[A:B]# or IDEIOR[A:B]# is de-asserted, this will be the last cycle until DRQ re-asserts. In this case, IDEDAK[A:B]# will be de-asserted one clock after the IDEIOW[A:B]# or IDEIOR[A:B]# signal de-asserts. This allows for the support of the single and multiword DMA cycles automatically.

Table 3-3 Eight-bit Fixed Timing

Parameter	**Time (CLKs)** **SPD ="1"**
Command on	10
Command off	10
Address setup	3
Address hold	1
Data setup (wr)	3
Data Hold (wr)	1
Cycle time	20

If CLK $\leq$ 33 MHz, then the timing in Table 3-3 is ATA Mode 0 compatible.

3.16 PIO Transfers

When transferring data with the PIO protocol, I/O read/write cycles are executed on the IDE interface and PIO transfers are executed on the PCI bus. The IDE interface address and chip select signals will only change when a decoded cycle is detected on the PCI bus. This minimizes IDE interface switching and EMI noise. Once a 16 or 32 bit cycle to a data port is detected, the W83C553F will setup the proper address and chip selects. Once the address setup time has been met, IDEIOR[A:B]# or IDEIOW[A:B]# will be asserted and held on until the on command time has been met. The W83C553F will then de-assert IDEIOR[A:B]# or IDEIOW[A:B]# and hold the addresses and chip selects stable. If read ahead or posted writes are enabled for this device, read or write cycles will be executed at the programmed on/off timing until the read ahead buffer is full, the read ahead count is complete, or the posted write buffer is empty. This will maximize the IDE interface performance because the address setup and hold timing will only add overhead at the beginning and end of a block transfer. All timing in between is controlled by the command on/off times or the host throughput which ever is slower. The IDEIOR[A:B]# / IDEIOW[A:B]# signals will never be asserted (cycle committed) if the FIFO is full/empty.

If an 8 bit cycle to a different register is decoded on the PCI bus while read ahead is active, the read ahead buffer will be preserved, the read ahead will pause and the 8 bit cycle will be executed. Once the 8 bit cycle is completed the read ahead will resume if a 16 or 32 bit data port read is decoded on the PCI bus. This allows for the host to check the status register during a data transfer without loosing data.

If an 8 bit cycle to a different register is decoded on the PCI bus while posted write is active, the posted write buffer will be written to the IDE device while inserting wait states to the PCI bus. Once the write buffer is empty, the 8 bit cycle will be executed.

The IDE interface and buffers will not be affected by the W83C553F configuration cycle accesses.

During data port read cycles with read ahead active, if an interrupt is detected on the IDE interface it will not be passed to the PCI bus until the data buffer is empty.

The 16-byte PIO FIFO allows the two channels to transfer data simultaneously without corrupting data between the channels. Past dual port chips required that interrupts be disabled during a data transfer because only one data FIFO existed and being interrupted out of a transfer to access the second port caused the read ahead/posted write data in the FIFO to be lost or corrupted.

All accesses to configuration registers and all 8 bit IDE accesses will be executed in the real time (read ahead and posted write not used). Only 16 and 32 bit cycles to an IDE data register will support read ahead or posted writes.

3.17 32-Bit Data Transfers

32-bit data transfers are used to reduce system overhead and improve performance. The standard PIO protocol requires the system CPU to execute an I/O cycle and a memory cycle to move two bytes of data between the IDE device and memory. To transfer 4 bytes of data would require two I/O cycles and two memory cycles. This can be accomplished with one 32-bit I/O and one 32-bit memory cycle. This cuts the CPU cycles in half. By enabling read ahead, the IDE read cycles will be buffered from the PCI bus and execute in parallel with the system memory reads cutting overhead more. Enabling posted writes will similarly improve write performance.

PCI Bus 32-Bit PIO Write Cycle

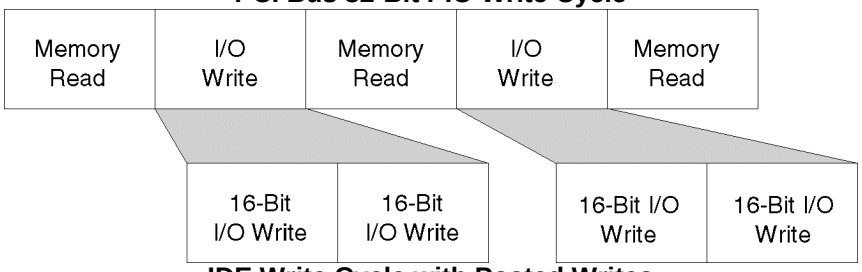

IDE Write Cycle with Posted Writes

PCI Bus 32-Bit PIO Read Cycle

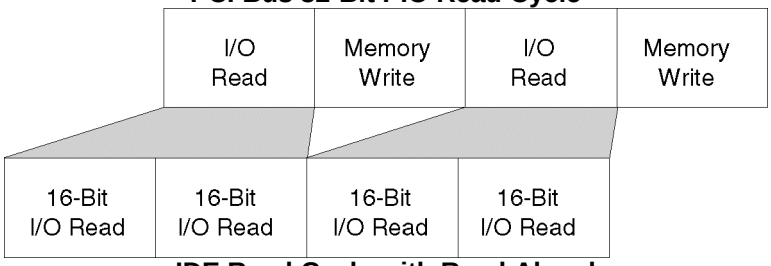

IDE Read Cycle with Read Ahead

The two drawings shown above show the relationship between the PCI bus and the IDE interface.

3.18 Bus Master Transfers

When operating as a bus master on the PCI bus, DMA cycles will be executed on the IDE interface. In this mode, once the BMEN bit of the Bus Master Control Register is set the W83C553F will de-assert the chip selects for that port and respond to DRQ as defined above. If an interrupt is generated on the IDE interface, it will be delayed for IDE device to memory transfers until the FIFO is empty (written to memory). The IDEIOW[A:B]#/IDEIOR[A:B]# will be held high and not asserted (pause) any time that the FIFO is empty/full.

To maximize the PCI bus bandwidth, the bus master FIFO is independent of the PIO FIFOs. It is 64 bytes deep which allows the W83C553F to burst transfers of 8 double words consistently. This allows the use of the Memory Read Line and Memory Write And Invalidate commands.

If both ports operate in the bus master mode, they will share the same FIFO and a fairness arbitration will be employed to guarantee both ports have transfer time slices.

Using this protocol to transfer data relieves the System CPU overhead by 90% typically. This is achieved because the CPU only needs to send the command to the target IDE device, set up the bus master PRD table, and program the bus master register set. There will only be one interrupt per command to service, whereas PIO commands require one interrupt per sector or block of sectors, and the CPU must manually transfer all data.

PCI bus utilization is also reduced by up to 90% over the standard PIO protocol. The bus master core can transfer one sector of data with less than 6 microseconds of active bus time, regardless of the IDE device transfer rate. The same PIO transfer requires over 150 microseconds of active bus time, when using a Mode 0 IDE device.

3.19 82C59A Interrupt Controller

Two interrupt controllers are included in the W83C553F, and are internally cascaded to handle a total of 15 interrupt channels. IRQ0 is internally connected to OUT0, of the 82C54 counter/timer. Typically, an interrupt is generated by the rising edge of an IRQ signal. However, IRQ8 and IRQ13 are fixed to trigger on the falling edge, allowing direct connection to the real time clock interrupt (IRQ8#), or Pentium CPU floating point error signal (FERR#). Also, RX 4D0h and RX 4D1h can be programmed to change the IRQs from edge sensitive to level sensitive interrupts. All external IRQ lines are internally pulled-up to eliminate noises on unconnected request pins. I/O port and channel definition matches that of the IBM PC/AT requirement.

3.20 82C37A DMA Controller

Two 82C37A DMA controllers are integrated into the W83C553F. Each controller is a four channel DMA device, generating memory addresses and control signals necessary to transfer information between a peripheral device and memory, without CPU intervention.
The two controllers are cascaded to provide four DMA channels permitting 8-bit peripheral device data transfers. Three channels permit 16-bit peripheral device data transfers. The I/O port and channel definition matches that of the IBM PC/AT requirement.

Type A, B and F DMA are supported in the W83C553F. Both DMA controllers support full 32-bit addressing and scatter/gather transfer capability.

3.21 82C54 Counter/Timer

One 82C54 counter/timer, with three channels, is included in the W83C553F. The clocks for the three channels are connected to the 14.31818 MHz clock through a divide-by-twelve counter. The gate inputs of counters 0 and 1 are tied high so that they are always enabled. The gate input of counter 2 is tied to bit 0 of Port B, inside the chip. The output of counter 0 is connected to the IRQ0 input of the interrupt controllers. The output of counter 1 goes to the arbitration logic for a refresh request. Finally, the output of counter 2 goes to an AND gate, which drives the SPKR output pin. The other input to this AND gate comes from bit 1 of Port B.

3.22 PCI Arbiter

The W83C553F contains a programmable, eight master PCI arbiter which can be tailored to meet system-specific arbitration requirements. Pin 16 is available to strap the arbiter into its disabled state on power-up. A weak 2.2K ohm pull-down resistor is recommended for this in systems using an external arbiter. When disabled, the "Function 0" ISA bridge uses the REQ#/GNT# pair on pins 25 and 26, and the "Function 1" IDE uses the REQ#/GNT# pair on pins 27 and 28. If no pull-down resistor is used on pin 16, the on-chip arbiter will "come up" enabled after power up.

When in the active state, the eight masters supported by the W83C553F are its two internal masters (ISA bridge and IDE), the system CPU, and REQ#/GNT#[4:0] which are available to the system designer. The PCI5TH# function of pin 13 can be used to change the fifth REQ#/GNT# pair (on pins 6 and 7) to FLSHREQ#/FLSHACK# if desired (in either CPU mode). This PCI5TH# function is automatically overidden by the ARBDIS# pin when enabled.

FLSHREQ#/FLSHACK# are only used in Guaranteed Access Timing (GAT) mode. In GAT mode, before Function 0 makes a request for the PCI bus, it asserts FLSHREQ# to the system and waits for FLSHACK# to be asserted. The system can use this signal to flush all PCI buffers so that the W83C553F can be granted unimpeded access to main memory. When Function 0 (PCI-to-ISA bridge) is not in GAT mode, it behaves as any other PCI master device.

Upon power-up, the arbiter defaults to a "round-robin" rotation scheme allowing all PCI masters equal access to the local bus. If desired, the relative priority of each REQ/GNT pair can be custom tailored to a specific system design via the PCI Priority Control Register 1 at Index 80h in the Function 0 PCI Configuration Space. Note that all masters are assured of access to the PCI bus at least once during each rotation regardless of the programming options chosen. (This is required for PCI compliance, so no functions are "locked out" for an extended period).

3.23 Break Events

Break events include IRQ0 - IRQ15, DRQ0 - DRQ7, SERR#, ISA IOCHK#, INTR and non-maskable interrupts to the CPU (NMI). OEM designers can program Function 0 PCI Configuration Registers 60h - 63h to select individual IRQs and DRQs as the break events. These registers allow the W83C553F to function within a comprehensive power management scheme with an external power management unit (as located on CPU-to-PCI bridge devices) in a green PC application.

3.24 CPU Modes (X86 or PowerPC)

The W83C553F incorporates two different CPU modes which change the functionality of several pins on the chip. An x86 mode supports any Intel-compatible microprocessor, including Pentium, AMD K5, Cyrix M1, NexGen 586, Intel P6, and others. A PowerPC mode supports the IBM/Apple/Motorola PowerPC microprocessor Common Hardware Reference Platform, as well as other RISC CPUs, such as DEC Alpha, Sun SPARC, and MIPS R4xxx CPUs.

Following is a summary of pins which change functionality depending on which CPU mode is chosen for the W83C553F via strapping pin 8 high (PowerPC) or low (x86) with a weak (2.2K ohm) resistor:

Pin #	x86 Function	PowerPC Function
4	IGNNE#	HRESET#
5	PMACT#	ISARST
22	A20M#	PCIRST#
116	XRD#	SECURITY/XRD#
118	XCS1	X8XCS
119	XCS0	ROMCS

It can be seen from the above table (and the respective pin descriptions on pages 12-25) that the W83C553F is able to generate all of the required reset signals for the microprocessor, PCI bus, and ISA bus when in PowerPC (non-x86) mode.

4.0 REGISTER INFORMATION

The W83C553F SIO controller with PCI arbiter is a multi-function PCI device. Function 0 is the ISA bridge, and Function 1 is the bus master IDE controller. The registers summarized in this section are organized as follows:

- PCI Configuration Space - ISA Bridge Registers (Function 0)
- ISA Bridge (Function 0) I/O Registers
- PCI Configuration Space - Bus Master IDE Registers (Function 1)
- Bus Master IDE (Function 1) I/O Registers

Each function of the W83C553F SIO chip supports a complete set of configuration registers as defined in the PCI Spec. Rev. 2.1 for a 32-bit bus implementation. Additional configuration registers are supported for bus master and IDE port/device control. They can be accessed whenever the PCIRST# signal is de-asserted. These registers are internal to the W83C553F, and control the operation of the chip when responding to bus I/O cycles.

They are accessed when a configuration bus cycle is executed with IDSEL asserted and AD[1:0] both low. All registers are implemented as 32-bit registers and the C/BE[3:0]# inputs determine which byte lanes are read/written. This allows the registers to be accessed 8, 16, 24, or 32 bits at a time. The specific 32-bit register is directly addressed by AD[7:2].

All reserved bits and bytes return a logic 0 when read. All reserved bytes written will execute normal PCI cycles, but will not affect the operation or device registers.

The internal register information for the W83C553F is organized as follows:

- Register name and Index value offset from base address.
- Type (Read and/or Write).
- Bit description.

W83C553F Register Accessibility

Functional Block	Address Range (Hex)	ISA	PCI	Broadcasted
Config. Space	0-FF		X P	
PIC 1	20-21	X P	X P	
Counter/Timer	40-43	X P	X P	
Port B	61	X P	X P	
RTC Index (shadow)	70 write	X P	X P	X P
DMA Page	81, 82, 83, 87, 89, 8A, 8B	X P	X P	
Port 92	92	X P	X P	X P
PIC2	A0-A1	X P	X P	
Co-processor Error	F0 write	X	X	X
DMA1	0-F		X P	
BMTR	78-7B		X P	
DMA2	C0-DE		X P	
Interrupt Mode	4D0-4D1		X P	
RTC CMOS RAM	810, 812		P	P

X = accessible in x86 mode
P = accessible in PowerPC mode

4.1 PCI Configuration Space - ISA Bridge Registers (Function 0)

4.1.1 Function 0 Header Registers

Vendor ID Register	Index: 01-00h

Bit [15:0] → Vendor ID

Vendor ID Register (default = 10ADh)

Bit Description:

Bits [15:0]: VENDID. Vendor ID for Symphony Laboratories is 10ADh.

Device ID Register	Index: 03-02h

Bit [15:0] → Device ID

Device ID Register (default = 0565h)

Bit Description:

Bits [15:0]: DEVID. Device ID for ISA bridge is 0565h.

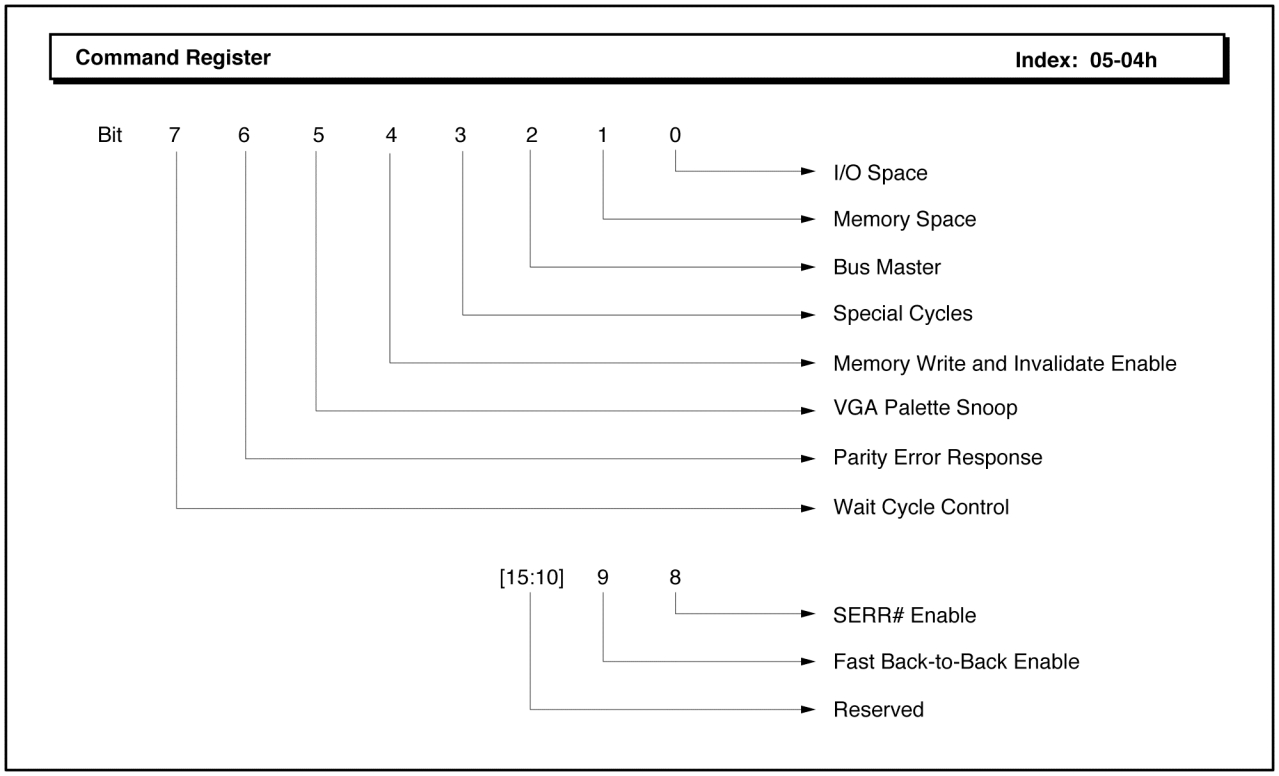

Command Register (default = 0007h)

Type: Read/Write

Bit Description:

Bits [15:10]:	Reserved. These read only bits are all set to "0".
Bit 9:	Fast Back-to-Back Enable. W83C553F does not generate fast back-to-back cycles. This read only bit is set to "0".
Bit 8:	SERR# Enable. W83C553F does not drive the SERR# pin. Defaults to "0".
Bit 7:	Wait Cycle Control. W83C553F does not use address/data stepping. This read only bit is set to "0".
Bit 6:	Parity Error Response. This is a read/write bit.
Bit 5:	VGA Palette Snoop. W83C553F is not a VGA device. This read only bit is set to "0".
Bit 4:	Memory Write and Invalidate Enable. W83C553F does not generate memory write and invalidate commands. This read only bit is set to "0".
Bit 3:	Special Cycles. W83C553F ignores all special cycles when reset. Defaults to "0".
Bit 2:	Bus Master. Always enabled. This read only bit is set to "1".
Bit 1:	Memory Space. Always enabled. This read only bit is set to "1".
Bit 0:	I/O Space. Always enabled. This read only bit is set to "1".

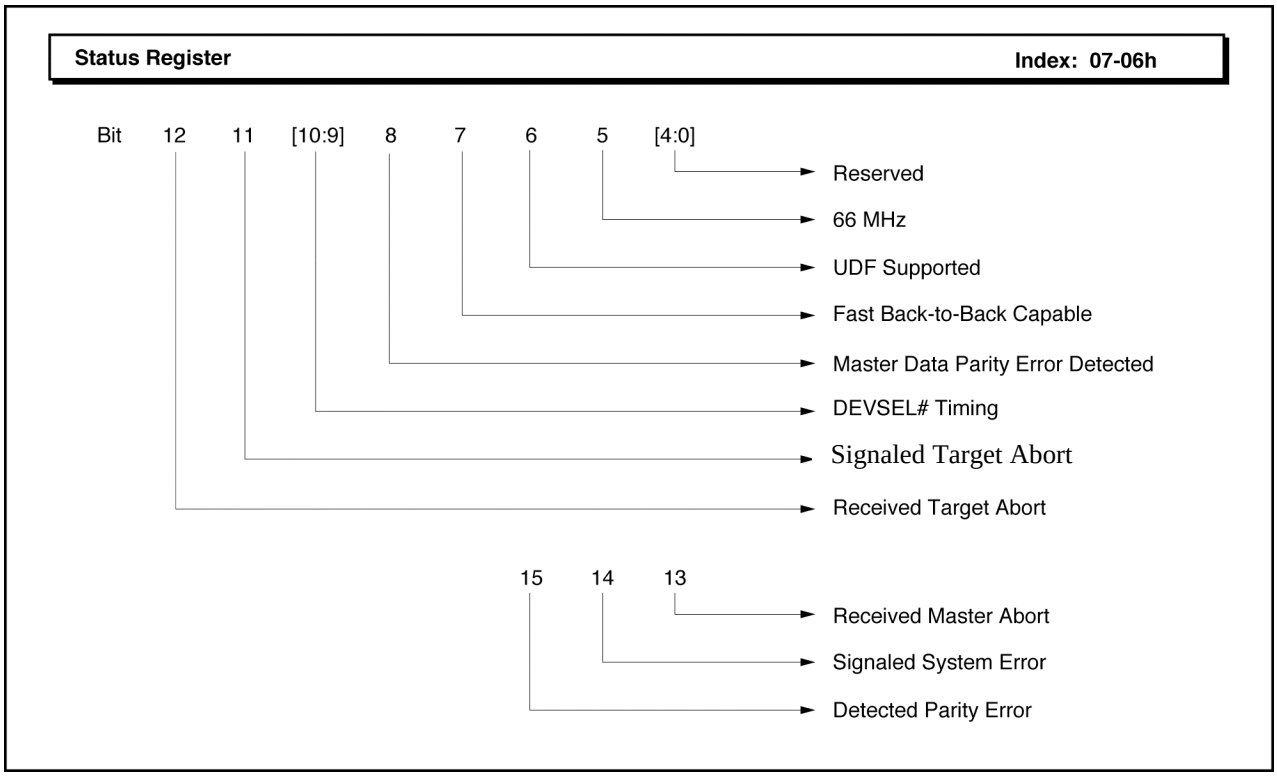

Status Register (default = 0200h)

Type: Read/Write

Bit Description:

Bit 15:	Detected Parity Error (DPE). This bit is read/write.
Bit 14:	Signaled System Error (SSE).
Bit 13:	Received Master Abort (RMA). This bit is read/write.
Bit 12:	Received Target Abort (RTA). This bit is read/write.
Bit 11:	Signaled Target Abort (STA). This bit is read/write.
Bits [10:9]:	DEVSEL# Timing (DVSLT). Medium speed. These read only bits are both set to "01".
Bit 8:	Master Data Parity Error Detected (MDPE). This bit is read/write.
Bit 7:	Fast Back-to-Back Capable (FB2BC). W83C553F does not decode fast back-to-back cycles across different targets. This read only bit is set to "0".
Bit 6:	UDF Supported (UDFS). W83C553F does not support user definable features. This read only bit is set to "0".
Bit 5:	66 MHz Capable (PCI66C). W83C553F does not support 66 MHz bus speed. This read only bit is set to "0".
Bits [4:0]:	Reserved. This read only bit is set to "0".

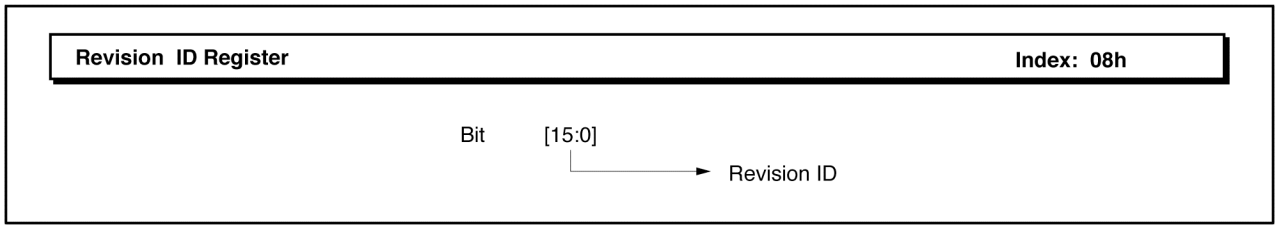

Revision ID Register (default = 00h)

Bit Description:

Bits [7:0]: REVID. Revision ID for ISA Bridge is 00h.

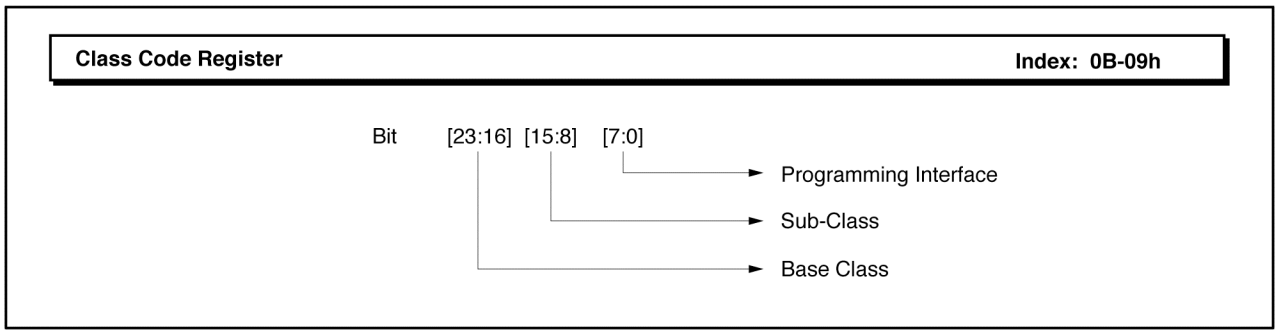

Class Code Register (default = 060100h)

Bit Description:

Bits [23:16]: BCLASS. Base Class is 06h. Bridge device.
Bits [15:8]: SCLASS. Sub-Class is 01h. ISA bus.
Bits [7:0]: PROGIF. Programming Interface is 00h.

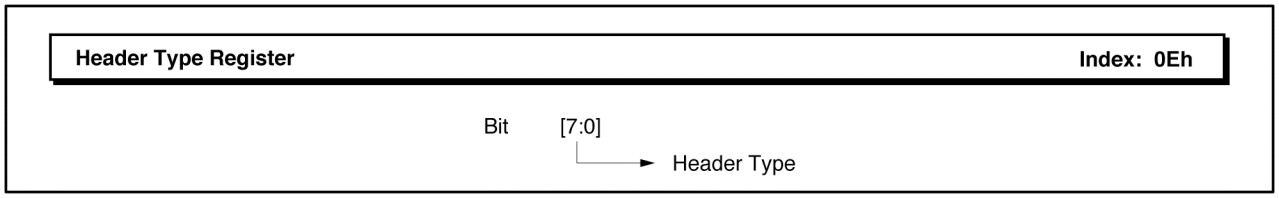

Header Type Register (default = 80h)

Bit Description:

Bit 7: MFCN. Multi-Function Device is "1". W83C553F contains two functions (ISA bridge and IDE master).

Bits [6:0]: CFGLAY. Configuration Layout is 00h. Non-PCI-to-PCI bridge device.

4.1.2 Function 0 Control Registers

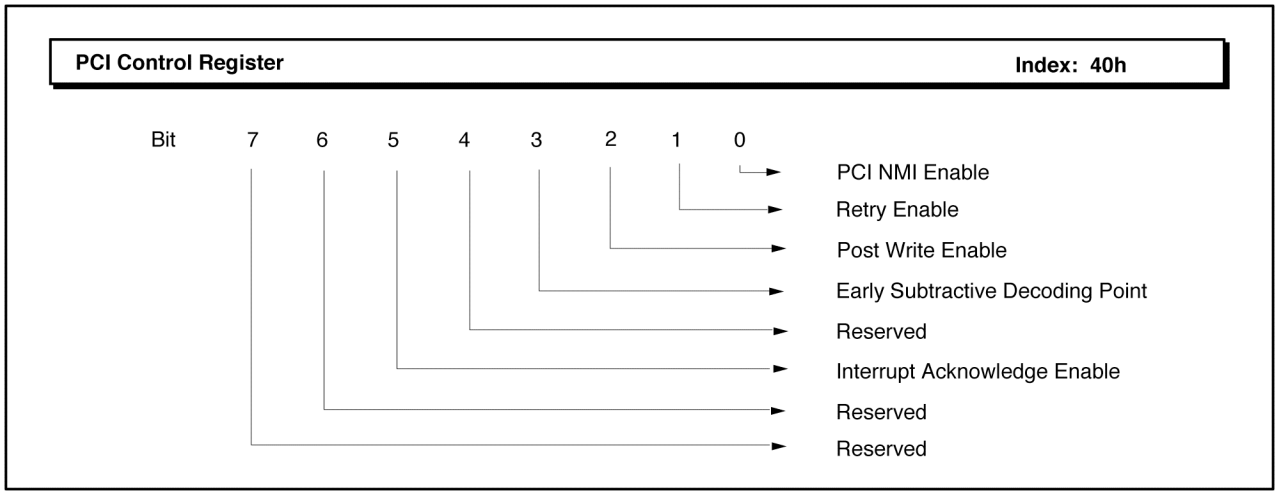

PCI Control Register (default = 20h)

Type: Read/Write

Bit Description:

Bit 7: Reserved. This read only bit is set to "0".

Bit 6: Reserved.

Bit 5: IAE. Interrupt Acknowledge Enable. Setting this bit allows the W83C553F chip to respond to the interrupt acknowledge command. This bit is active after reset.

Bit 4: Reserved. This read only bit is set to "0".

Bit 3: ESDP. Early Subtractive Decoding Point. Setting this bit will move the subtractive decoding point one PCI clock earlier from "slow" to "medium" timing.

Bit 2: PWE. Post Write Enable. Setting this bit will allow PCI memory write cycles to the ISA bus to be posted.

Bit 1: RETRYE. Retry Enable. When this bit is set to "1", PCI slave cycles are retried when the internal bus is busy. When this bit is reset to "0" and the internal bus is busy, a PCI slave cycle will be held in wait states until the bus becomes idle and the access completes. The default state of this bit after a hardware reset is "0".

Bit 0: PCI NMI Enable. When set, PCI error status bits in the Status Register (except SSE) will generate an NMI. Defaults to "0".

Scatter/Gather Relocation Base Address Register (default = 04h)

Function: The value programmed into this register determines the high order I/O adress of the Scatter/Gather Command Registers, Scatter/Gather Status Registers, and Scatter/Gather Descriptor Table Registers. The first Scatter/Gather register default address is at 0410h.

Type: Read/Write

Bit Description:

Bits [7:0]: AD[15:8]. These are the address bits of the relocated address space.

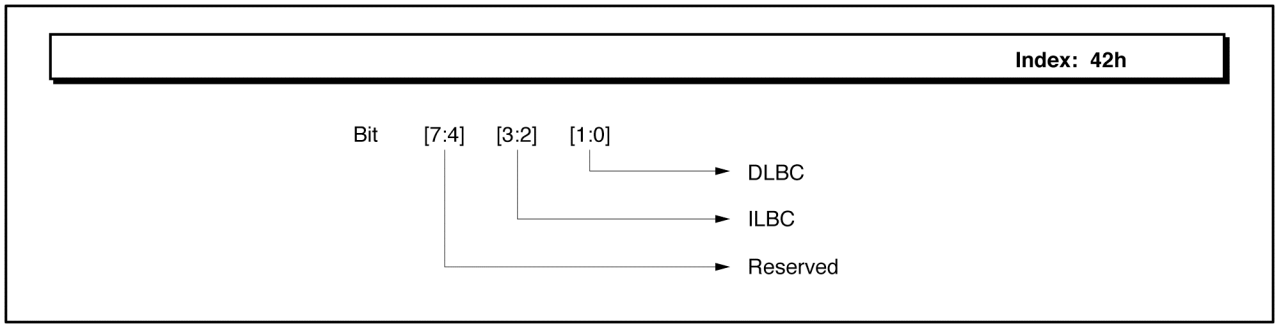

Line Buffer Control Register (default = 00h)

Type: Read/Write

Bit Description:

Bits [7:4]: Reserved.

Bits [3:2]: ISA Master Line Buffer Configuration.

Bit 3	2	Function
0	0	Single transaction
0	1	Reserved
1	0	Reserved
1	1	Reserved

Bits [1:0]: DLBC. DMA Line Buffer Configuration.

Bit 1	0	Function
0	0	Single transaction
0	1	Reserved
1	0	Reserved
1	1	Reserved

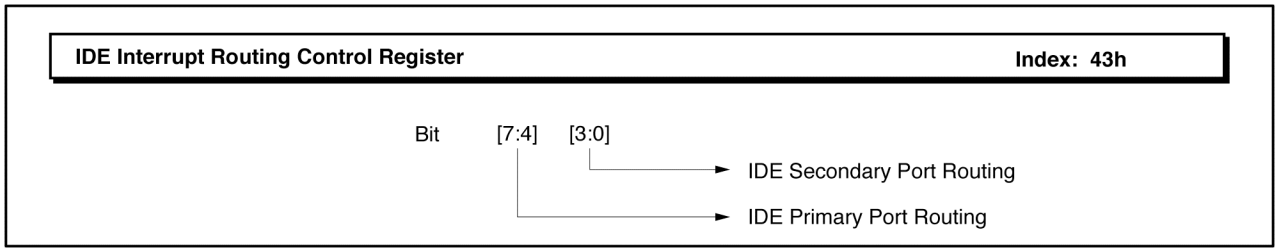

IDE Interrupt Routing Control Register (default = EFh)

Type: Read/Write

Bit Description:

Bits [7:4]: IRQARCH [3:0]. Routes IDE Primary Port IRQ to the interrupt controller. Defaults to Eh (IRQ14).

Bits [3:0]: IRQBRCH [3:0]. Routes IDE Secondary Port IRQ to the interrupt controller. Defaults to Fh (IRQ15).

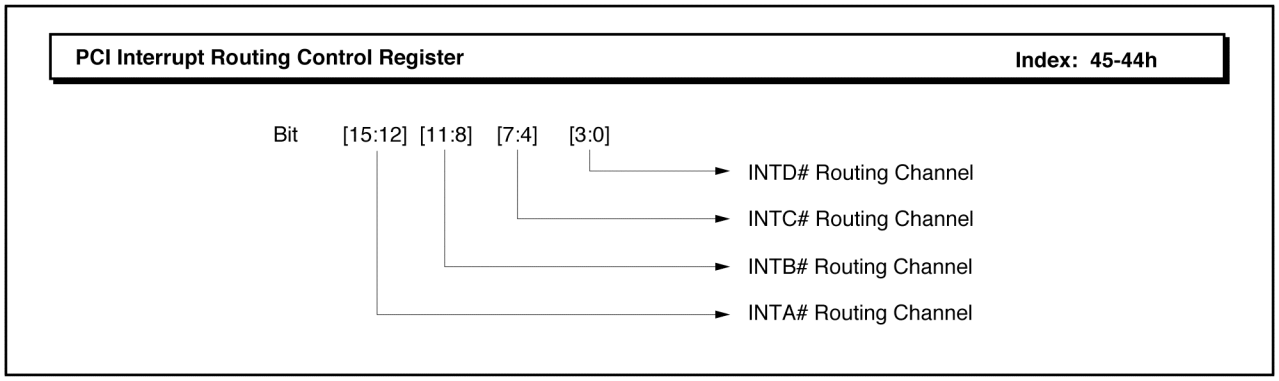

PCI Interrupt Routing Control Register (default = 0000h)

Type: Read/Write

Bit Description:

Bits [15:12]: INTARCH [3:0]. INTA# Routing Channel. This field specifies the routing channel for INTA#. Note channels 0, 1, 2, 8 and 13 are reserved. Setting this field to these values will disable routing. Default value after a hardware reset is "0".

Bits [11:8]: INTBRCH [3:0]. INTB# Routing Channel. This field specifies the routing channel for INTB#. Note that channels 0, 1, 2, 8 and 13 are reserved and setting this field to any of these values will effectively disable routing. The default value after a hardware reset is "0".

Bits [7:4]: INTCRCH [3:0]. INTC# Routing Channel. This field specifies the routing channel for INTC#. Note that channels 0, 1, 2, 8 and 13 are reserved and setting this field to any of these values will effectively disable routing. The default value after a hardware reset is "0".

Bits [3:0]: INTDRCH [3:0]. INTD# Routing Channel. This field specifies the routing channel for INTD#. Note that channels 0, 1, 2, 8 and 13 are reserved and setting this field to any of these values will effectively disable routing. The default value after a hardware reset is "0".

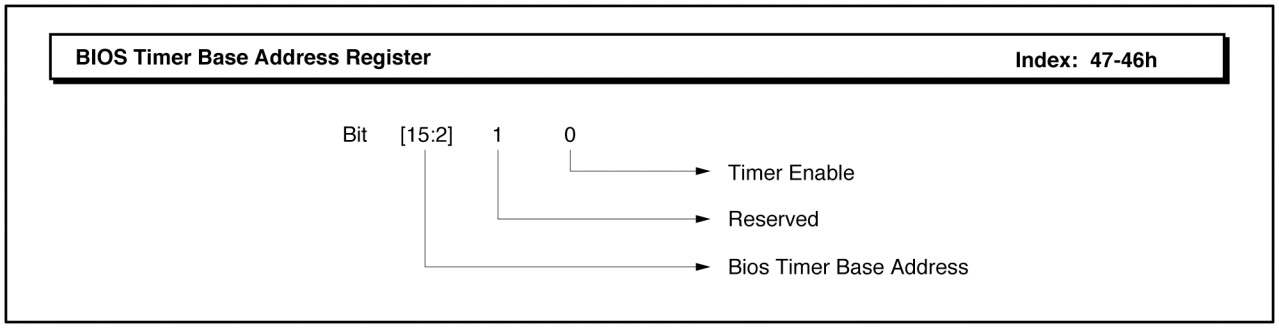

BIOS Timer Base Address Register (default = 0078h)

Type: Read/Write

Function: The base address for the BIOS Timer Register located in PCI I/O space. The BIOS Timer resides in the W83C553F and is the only internal resource mapped to PCI I/O space.

Bit Description:

Bits [15:2]: BTMRBA. BIOS Timer Base Address. This register specifies the Base Address 15:2 for the BIOS Timer register located in the I/O space. The lower two bits of the base address are 00 (Dword aligned). The value of this register points to 78h (0000_0000_0111_10xx) after a reset.

Bit 1: Reserved.

Bit 0: BTMRE. Timer Enable. When this bit is set to "1", the BIOS timer function is enabled and the base address of the timer registers is programmed in Bits [15:2].

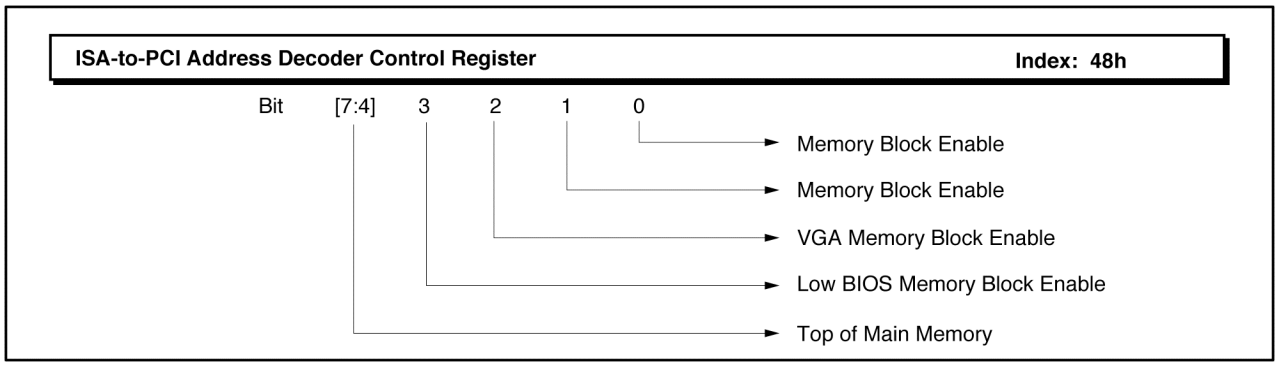

ISA-to-PCI Address Decoder Control Register (default = 01h)

Type: Read/Write

Bit Description:

Bits [7:4]: IPATOM [3:0]. Top of Main Memory. Defines the top of memory for ISA memory space. ISA memory accesses from 1 MByte to top of memory (except "hole") and above 16 MByte are forwarded to the PCI bus.

Bit 7	Bit 6	Bit 5	Bit 4	Top of Memory
0	0	0	0	1 MByte
0	0	0	1	2 MByte
0	0	1	0	3 MByte
0	0	1	1	4 MByte
0	1	0	0	5 MByte
0	1	0	1	6 MByte
0	1	1	0	7 MByte
0	1	1	1	8 MByte
1	0	0	0	9 MByte
1	0	0	1	10 MByte
1	0	1	0	11 MByte
1	0	1	1	12 MByte
1	1	0	0	13 MByte
1	1	0	1	14 MByte
1	1	1	0	15 MByte
1	1	1	1	16 MByte

Bit 3: MBELBIOS. Low BIOS Memory Block Enable; 896-960 KByte (E0000-EFFFFh). When set to "1", ISA memory accesses in this range are forwarded to the PCI bus. The LBIOSCSE bit (UBCSA, configuration register 4Dh bit 6) overrides this bit.

Bit 2: MBEVGA. VGA Memory Block Enable; 640-768 KByte (A0000-BFFFF). When set to "1", ISA memory accesses in this range are forwarded to the PCI bus.

Bit 1: MBE640. Memory Block Enable; 512-640 KByte (80000-9FFFFh). When set to "1", ISA memory accesses in this range are forwarded to the PCI bus.

Bit 0: MBE512. Memory Block Enable; 0-512 KByte (0-7FFFFh). When set to "1", ISA memory accesses in this range are forwarded to the PCI bus. This bit is set to "1" after reset.

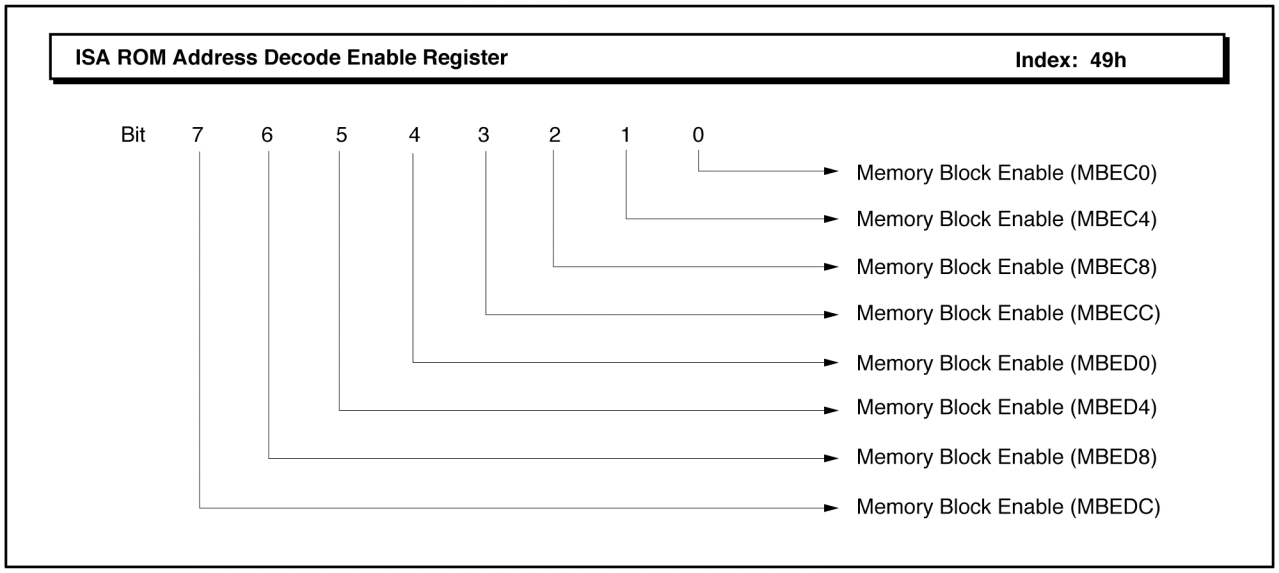

ISA ROM Address Decode Enable Register (default = 00h)

Function: When a bit is set to "1", memory accesses to the corresponding address range in the add-on BIOS area are forward to the PCI bus.

Type: Read/Write

Bit Description:

Bit 7: MBEDC. Memory Block Enable; 880-896 KByte. (DC000-DFFFFh).
Bit 6: MBED8. Memory Block Enable; 864-880 KByte. (D8000-CBFFFh).
Bit 5: MBED4. Memory Block Enable; 848-864 KByte. (D4000-C7FFFh).
Bit 4: MBED0. Memory Block Enable; 832-848 KByte. (D0000-C3FFFh).
Bit 3: MBECC. Memory Block Enable; 816-832 KByte. (CC000-CFFFFh).
Bit 2: MBEC8. Memory Block Enable; 800-816 KByte. (C8000-CBFFFh).
Bit 1: MBEC4. Memory Block Enable; 784-800 KByte. (C4000-C7FFFh).
Bit 0: MBEC0. Memory Block Enable; 768-784 KByte. (C0000-C3FFFh).

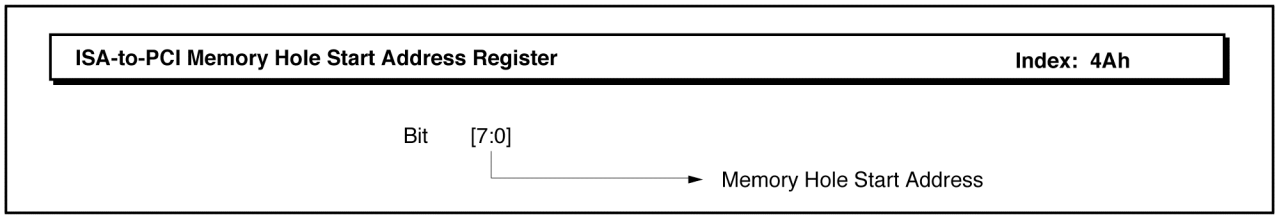

ISA-to-PCI Memory Hole Start Address Register (default = 00h)

Type: Read/Write

Bit Description:

Bits [7:0]: IPAHA. Memory Hole Start Address. These 8 bits specify the 8 most significant bits of the ISA address: LA[23:16].

Bit 7	Bit 6	Bit 5	Bit 4	Bit 3	Bit 2	Bit 1	Bit 0
LA23	LA22	LA21	LA20	LA19	LA18	LA17	SA16

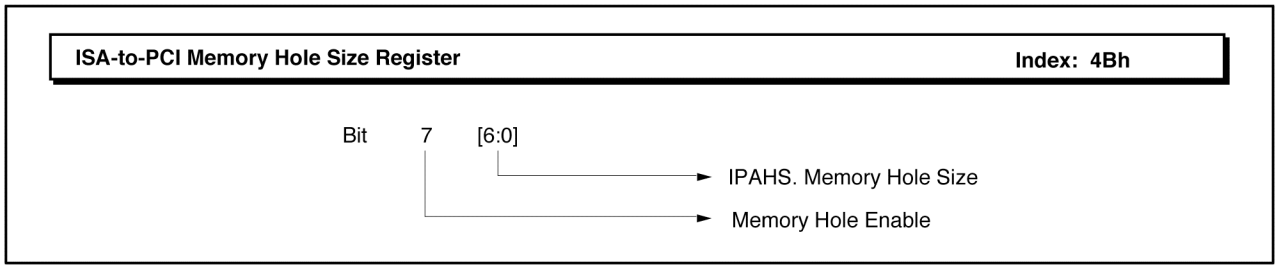

ISA-to-PCI Memory Hole Size Register (default = 00h)

Type: Read/Write

Bit Description:

Bit 7: IPAHE. Memory Hole Enable. When this bit is set to "1", access to the memory hole will not be forwarded to the PCI bus. When this bit is reset to "0", access to the hole will be forwarded to the PCI bus. The default value of this bit after a chip reset is "0".

Bits [6:0]: IPAHS. Memory Hole Size. This field specifies the sizes of the memory hole according to the following list:

Bit 6	Bit 5	Bit 4	Bit 3	Bit 2	Bit 1	Bit 0	
0	0	0	0	0	0	0	= 64 KBytes
0	0	0	0	0	0	1	= 125 KBytes
0	0	0	0	0	1	1	= 256 KBytes
0	0	0	0	1	1	1	= 512 KBytes
0	0	0	1	1	1	1	= 1 MBytes
0	0	1	1	1	1	1	= 2 MBytes
0	1	1	1	1	1	1	= 4 MBytes
1	1	1	1	1	1	1	= 8 MBytes

All other combinations are reserved.

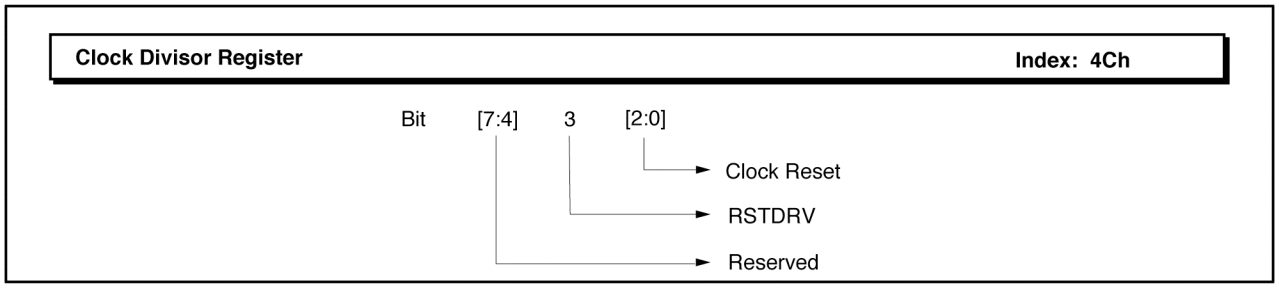

Clock Divisor Register (default = 00h)

Type: Read/Write

Bit Description:

Bits [7:4]: Reserved.

Bit 3: RSTDRV. Reset Drive, valid only in PowerPC mode. When this bit is set, PCIRST# and ISARST are enabled for 1 ms. This bit then clears (resets) itself.

Bits [2:0]: Clock select (CLKSEL). This field selects the divisor for generating BCLK from PCICLK. Combinations not listed are reserved.

Bit 2	Bit 1	Bit 0		
0	0	0	=	4
0	0	1	=	3
0	1	0	=	2
1	0	0	=	6
1	0	1	=	8

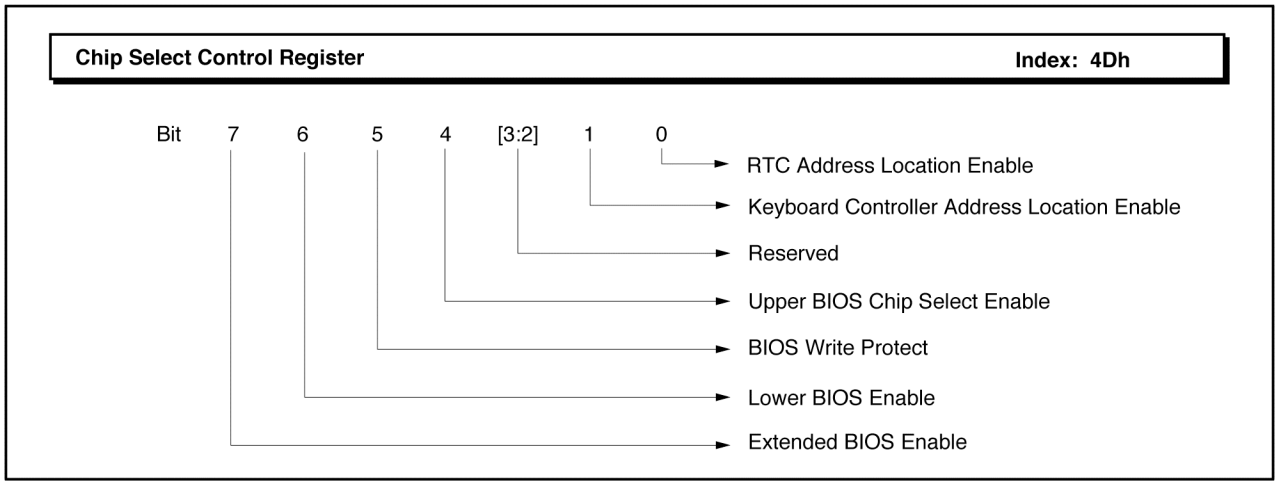

Chip Select Control Register (default = 33h)

Type: Read/Write

Bit Description:

Bit 7: EBIOSCSE. Extended BIOS Enable.
- 0= Disabled
- 1= Memory access from FFF80000h to FFFDFFFFh will assert ROMCS in PowerPC mode or the encoded output XCS[1:0 = 11 in x86 mode.

Bit 6: LBIOSCSE. Lower BIOS Enable.
- 0= Disabled
- 1= Memory access from FFFE,0000h to FFFE,FFFFh or FFEE,0000 to FFEE,FFFF or 000E,0000 to 000E,FFFF will assert ROMCS in PowerPC mode or the encoded output XCS[1:0] = 11 in x86 mode.

Bit 5: BIOSWP. BIOS Write Protect.
- 0= Disabled
- 1= When set, ROMCS in PowerPC mode or the encoded output XCS[1:0] = 11 in x86 mode will not be generated for write access to the BIOS space.

Bit 4: UBIOSCSE. Upper BIOS Chip Select Enable. This bit defaults to "1" after reset.
- 0= Disabled
- 1= For Revision ID 0, Memory access from FFFF,0000h to FFFF,FFFFh or FFEF,0000 to FFEF,FFFF or 000F,0000 to 000F,FFFF will assert ROMCS in PowerPC mode or the encoded output XCS[1:0] = 11 in x86 mode.
  For Revision ID 4, Memory access will be from 000F,0000 to 000F,FFFF or FF80,0000 to FFFF,FFFF..

Bits [3:2]: Reserved.

Bit 1: KBCSE. Keyboard Controller Address Location Enable. .
- 0= Disabled
- 1= Access to the I/O ports 60h, 62h, 64h, or 66h will give the encoded output XCS[1:0] = 11 for keyboard chip select in x86 mode. This bit is reserved in the PowerPC mode.

Bit 0: RTCCSE. RTC Address Location Enable.
- 0= Disabled
- 1= Access to the I/O ports 70-77h will give the encoded output XCS[1:0] = 01 for for RTC Data Port in x86 mode. This bit is reserved in the PowerPC mode.

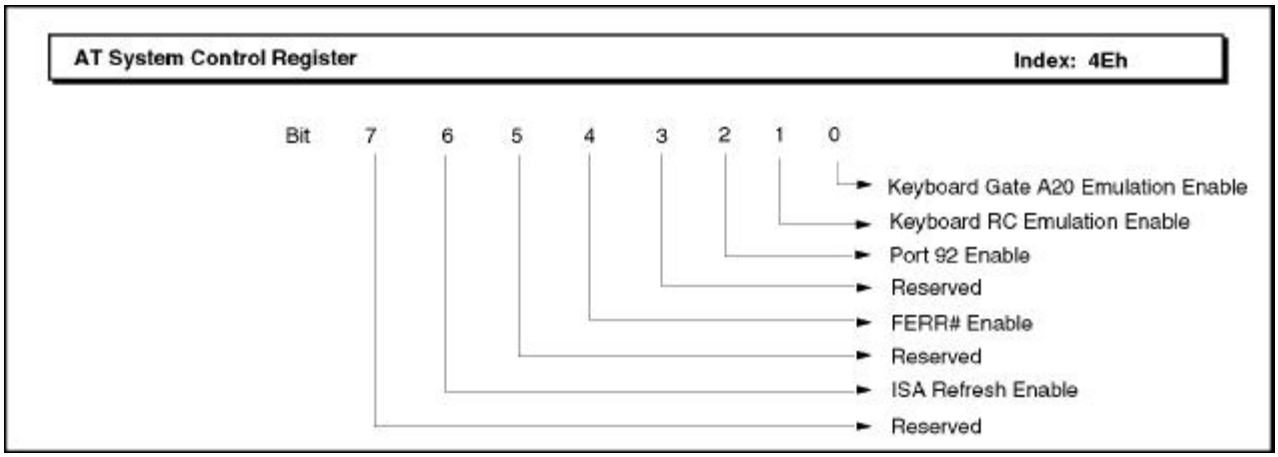

AT System Control Register (default = 04h)

Type: Read/Write

Bit Description:

Bit 7:	Reserved.
Bit 6:	ISA Refresh Enable.
Bit 5:	Reserved, always 0.
Bit 4:	FERR# Enable. If this bit is set to "1," pin 12 will function as the Numeric Co-processor error input.
Bit 3:	Reserved.
Bit 2:	P92E. Port 92 Enable. When enabled, access to Port 92 is enabled. When disabled, cycle will be passed to the ISA bus.
Bit 1:	Keyboard RC Emulation Enable. In x86 mode, this bit decodes the keyboard reset command and generates INIT for at more than 4 PCI clocks. In PowerPC mode, this bit decodes the keyboard reset command and generates HRESET# for 1ms.
Bit 0:	Keyboard Gate A20 Emulation Enable. This bit toggles the Gate A20 output in x86 mode, depending on the keyboard command.

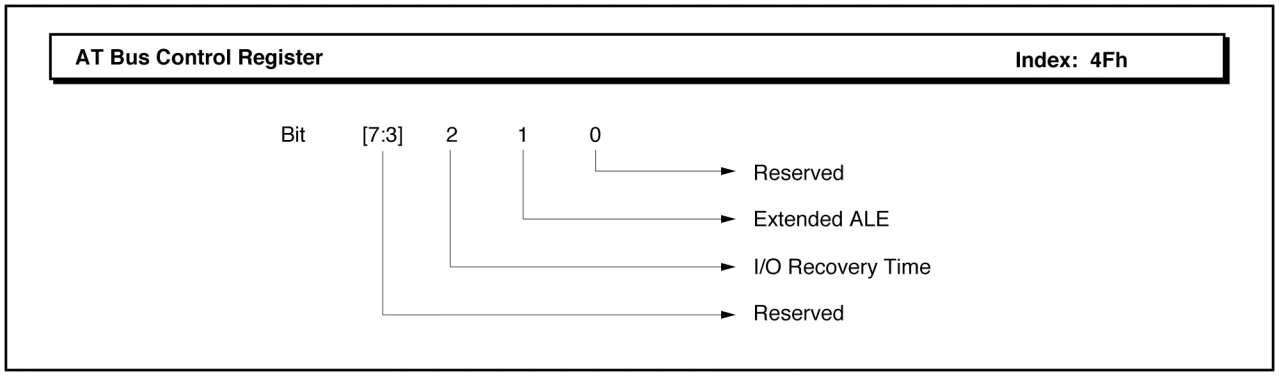

AT Bus Control Register (default = 00h)

Type: Read/Write

Bit Description:

Bits [7:3]: Reserved.

Bit 2: I/O Recovery Time.

0 = normal

1 = 4 BCLK delay for 16-bit I/O and 8 BCLK for 8-bit I/O access

Bit 1: Extended ALE.

0 = disable

1 = enable

Bit 0: Reserved.

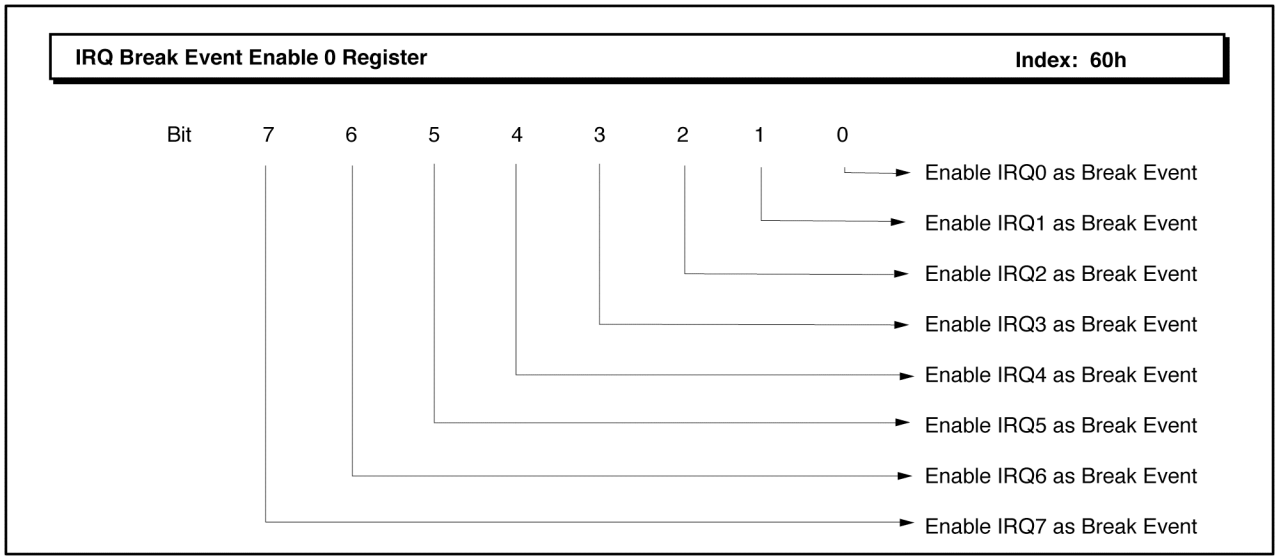

IRQ Break Event Enable 0 Register (default = 00h)

Function: This power management register may only be used while the W83C553F is in x86 mode.

Type: Read/Write

Bit Description:

Bit 7: IRQ7. Enable IRQ7 as Break Event. When this bit is "1," IRQ7 as Break Event detection is enabled. Upon detection, PMACT# is de-asserted.

Bit 6: IRQ6. Enable IRQ6 as Break Event. When this bit is "1," IRQ6 as Break Event detection is enabled. Upon detection, PMACT# is de-asserted.

Bit 5: IRQ5. Enable IRQ5 as Break Event. When this bit is "1," IRQ5 as Break Event detection is enabled. Upon detection, PMACT# is de-asserted.

Bit 4: IRQ4. Enable IRQ4 as Break Event. When this bit is "1," IRQ4 as Break Event detection is enabled. Upon detection, PMACT# is de-asserted.

Bit 3: IRQ3. Enable IRQ3 as Break Event. When this bit is "1," IRQ3 as Break Event detection is enabled. Upon detection, PMACT# is de-asserted.

Bit 2: IRQ2. Enable IRQ2 as Break Event. When this bit is "1," IRQ2 as Break Event detection is enabled. Upon detection, PMACT# is de-asserted.

Bit 1: IRQ1. Enable IRQ1 as Break Event. When this bit is "1," IRQ1 as Break Event detection is enabled. Upon detection, PMACT# is de-asserted.

Bit 0: IRQ0. Enable IRQ0 as Break Event. When this bit is "1," IRQ0 as Break Event detection is enabled. Upon detection, PMACT# is de-asserted.

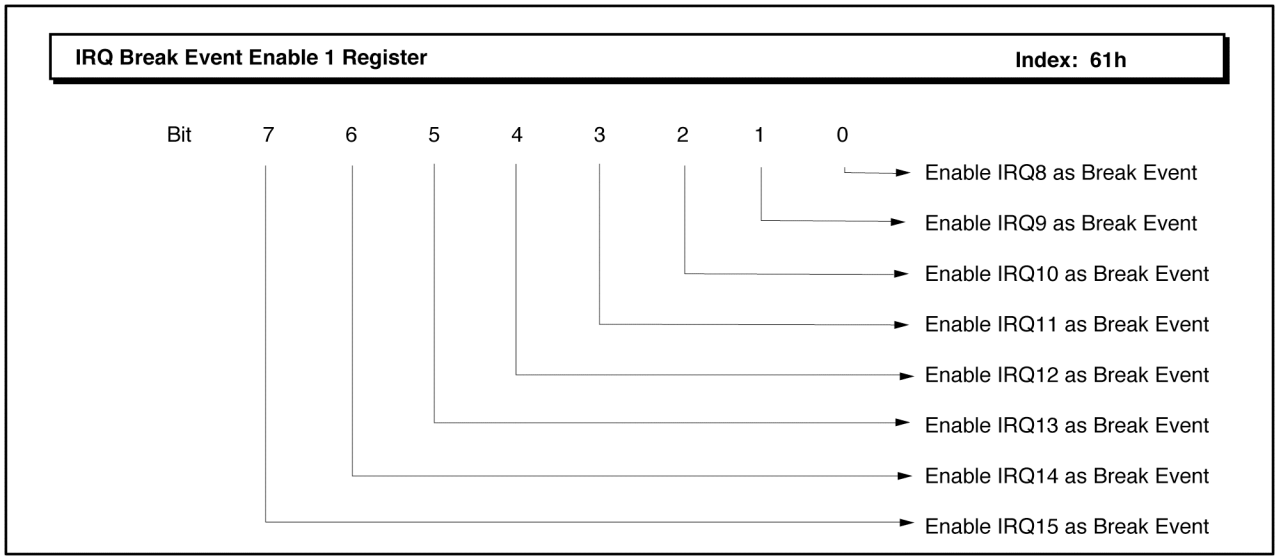

IRQ Break Event Enable 1 Register (default = 00h)

Function: This power management register may only be used while the W83C553F is in x86 mode.

Type: Read/Write

Bit Description:

Bit 7: IRQ15. Enable IRQ15 as Break Event. When this bit is "1," IRQ15 as Break Event detection is enabled. Upon detection, the PMU will de-assert PMACT#.

Bit 6: IRQ14. Enable IRQ14 as Break Event. When this bit is "1," IRQ14 as Break Event detection is enabled. Upon detection, the PMU will de-assert PMACT#.

Bit 5: IRQ13. Enable IRQ13 as Break Event. When this bit is "1," IRQ13 as Break Event detection is enabled. Upon detection, the PMU will de-assert PMACT#.

Bit 4: IRQ12. Enable IRQ12 as Break Event. When this bit is "1," IRQ12 as Break Event detection is enabled. Upon detection, the PMU will de-assert PMACT#.

Bit 3: IRQ11. Enable IRQ11 as Break Event. When this bit is "1," IRQ11 as Break Event detection is enabled. Upon detection, the PMU will de-assert PMACT#.

Bit 2: IRQ10. Enable IRQ10 as Break Event. When this bit is "1," IRQ10 as Break Event detection is enabled. Upon detection, the PMU will de-assert PMACT#.

Bit 1: IRQ9. Enable IRQ9 as Break Event. When this bit is "1," IRQ9 as Break Event detection is enabled. Upon detection, the PMU will de-assert PMACT#.

Bit 0: IRQ8. Enable IRQ8 as Break Event. When this bit is "1," IRQ8 as Break Event detection is enabled. Upon detection, the PMU will de-assert PMACT#.

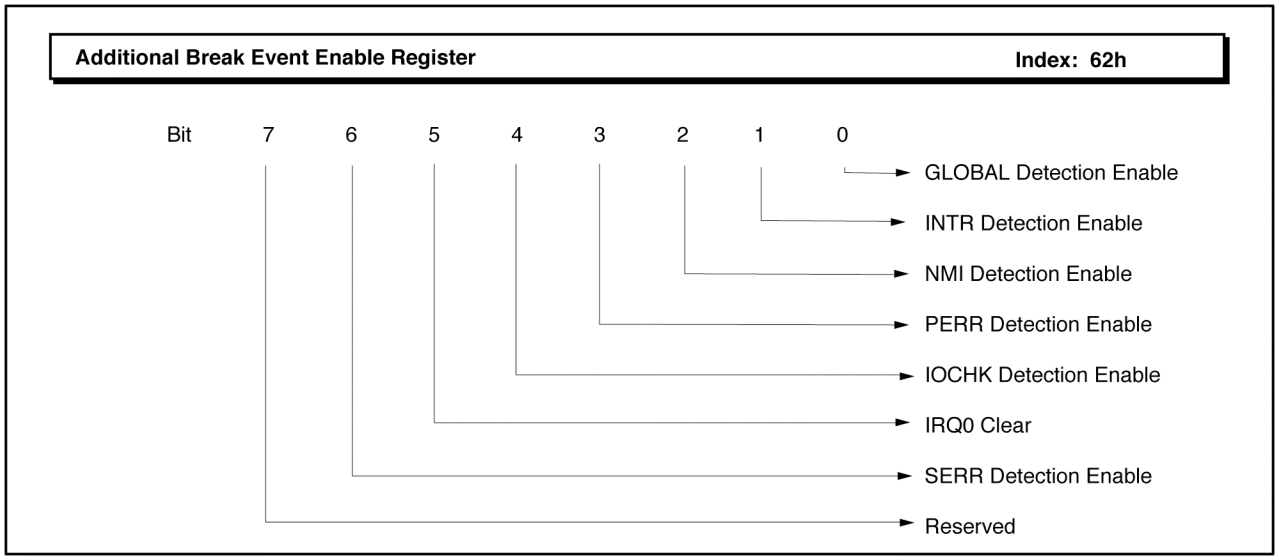

Additional Break Event Enable Register (default = 00h)

Function: This power management register may only be used while the W83C553F is in x86 mode.

Type: Read/Write

Bit Description:

Bit 7: Reserved.

Bit 6: PCI SERR#. SERR Detection Enable. When this bit is "1," SERR detection is enabled. Upon detection, the PMU will de-assert PMACT#.

Bit 5: IRQ0CLR. IRQ0 Clear. To clear IRQ0, write a "1", followed by a "0", to this bit.

Bit 4: ISA IOCHK#. IOCHK Detection Enable. When this bit is "1," IOCHK detection is enabled. Upon detection, the PMU will de-assert PMACT#.

Bit 3: PCI PERR#. PERR Detection Enable. When this bit is "1," PERR detection is enabled. Upon detection, the PMU will de-assert PMACT#.

Bit 2: NMI. NMI Detection Enable. When this bit is "1," NMI detection is enabled. Upon detection, the PMU will de-assert PMACT#.

Bit 1: Interrupt. INTR Detection Enable. When this bit is "1," INTR detection is enabled. Upon detection, the PMU will de-assert PMACT#.

Bit 0: PMUMGEN. GLOBAL Enable of Break Events. When this bit is "1," GLOBAL break event detection is enabled. Upon detection, the PMU will de-assert PMACT#.

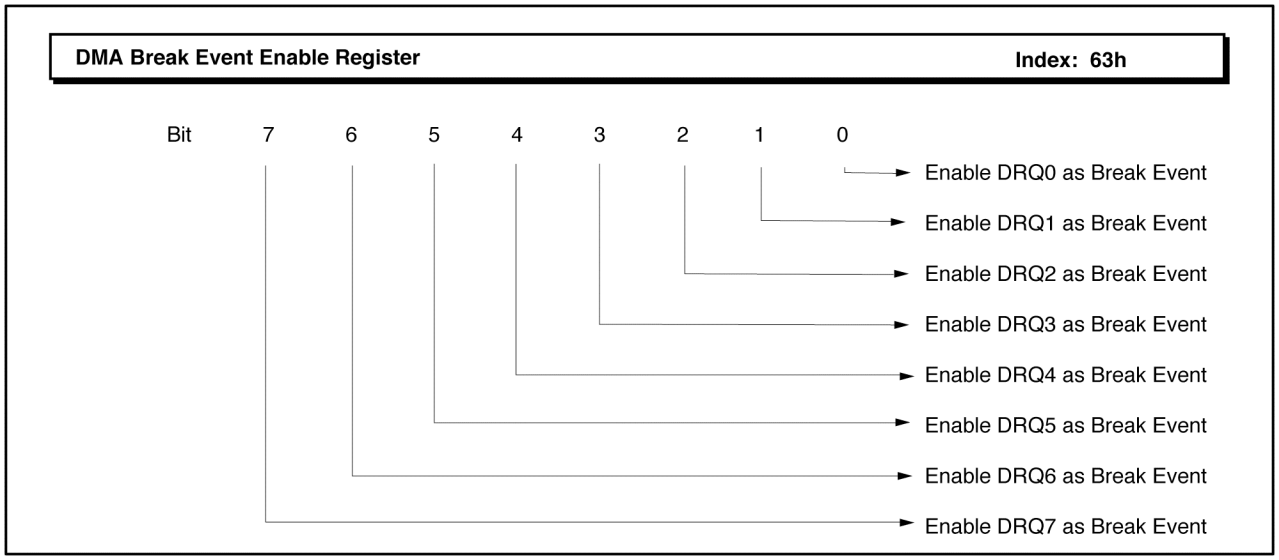

DMA Break Event Enable Register (default = 00h)

Function: This power management register may only be used while the W83C553F is in x86 mode.

Type: Read/Write

Bit Description:

Bit 7: DRQ7. Enable DRQ7 as Break Event. When this bit is "1," DRQ7 detection is enabled. Upon activation, the PMU will de-assert PMACT#.

Bit 6: DRQ6. Enable DRQ6 as Break Event. When this bit is "1," DRQ6 detection is enabled. Upon activation, the PMU will de-assert PMACT#.

Bit 5: DRQ5. Enable DRQ5 as Break Event. When this bit is "1," DRQ5 detection is enabled. Upon activation, the PMU will de-assert PMACT#.

Bit 4: DRQ4. Enable DRQ4 as Break Event. When this bit is "1," DRQ4 detection is enabled. Upon activation, the PMU will de-assert PMACT#.

Bit 3: DRQ3. Enable DRQ3 as Break Event. When this bit is "1," DRQ3 detection is enabled. Upon activation, the PMU will de-assert PMACT#.

Bit 2: DRQ2. Enable DRQ2 as Break Event. When this bit is "1," DRQ2 detection is enabled. Upon activation, the PMU will de-assert PMACT#.

Bit 1: DRQ1. Enable DRQ1 as Break Event. When this bit is "1," DRQ1 detection is enabled. Upon activation, the PMU will de-assert PMACT#.

Bit 0: DRQ0. Enable DRQ0 as Break Event. When this bit is "1," DRQ0 detection is enabled. Upon activation, the PMU will de-assert PMACT#.

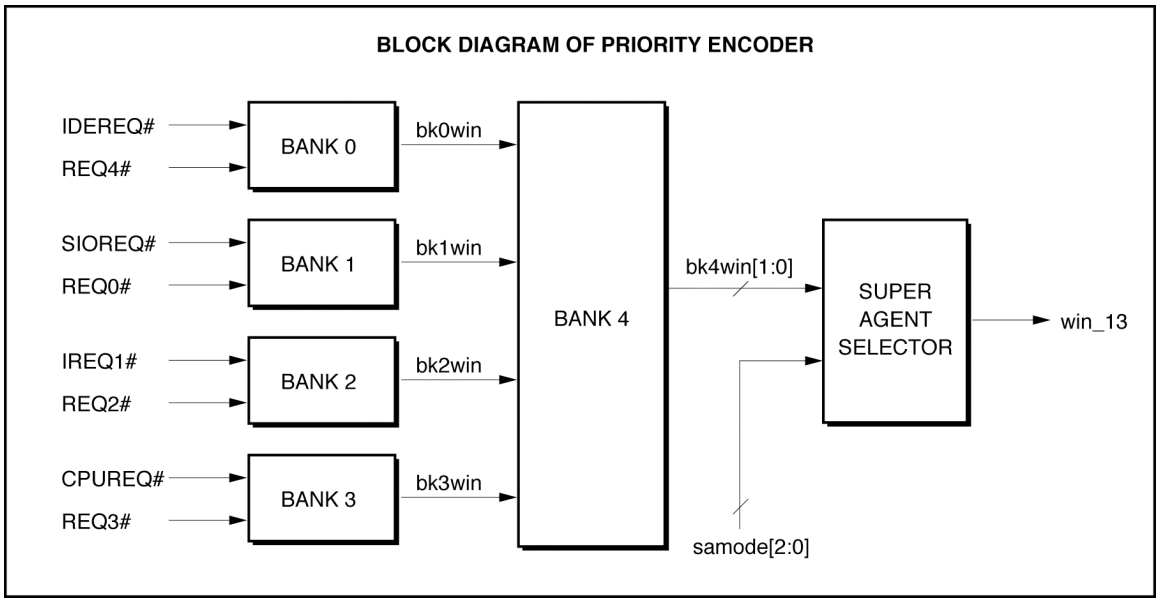

Level 1 Arbiter

There are two control bits for bank 1,2,3 modules. The "pfix" bit determines the fixed priority of the bank. The "protat" bit determines whether to rotate the priority scheme of the bank after a grant is given. If the "protat" bit is not set, the arbiter will give one request line higher priority ALL THE TIME. If the "protat" bit is set, the priority of the request lines are rotated after each grant to the higher priority line. For bank 0, the "pfix" value is fixed to 0 and the "protat" value is fixed to 0 also.

	pfix = 0	**pfix = 1**
Bank 1	SIOREQ# > REQ0#	REQ0# > SIOREQ#
Bank 2	REQ1# > REQ2#	REQ2# > REQ1#
Bank 3	CPUREQ# > REQ3#	REQ3# > CPUREQ#

Level 2 Arbiter

For bank 4, there are 2 bits, "fpmod[1:0]", indicating the fixed priority of the bank. There is one bit, "bk4rc", controlling the rotation of priority schemes. There are a total of 4 priority schemes each. A total of 8 slots are available on the round-robin rotation. 4 slots are assigned with a priority scheme each. 4 other slots are programmable with selected priority schemes.

fpmod[1:0]	**Priority Schemes**	**Slots**
00	IDEREQ# > bk1win > bk3win	Bank 0

Reserved Registers	Index: 71-70h 77-74h F6-F0h

Function: These register locations are reserved. Software should not attempt to read or write these locations.

PCI Arbiter Priority Control Register 1	Index: 80h

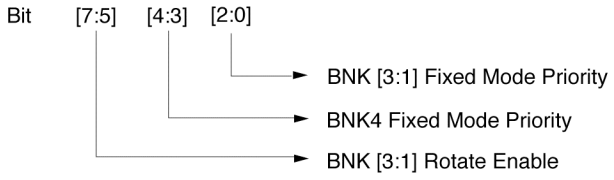

PCI Arbiter Priority Control Register 1 (default = E0h)

Type: Read/Write

Bit Description:

Bits [7:5]: Bank [3:1] Rotate Enable. Defaults to 111b (enabled).

Bits [4:3]: Bank 4 Fixed Mode Priority Select.

Bit 4	3	Function
0	0	ide –> bk1 –> bk2 –> bk3
0	1	bk1 –> bk2 –> bk3 –> ide
1	0	bk2 –> bk3 –> ide –> bk1
1	1	bk3 –> ide –> bk1 –> bk2

Bits [2:0]: Bank [3:1] Fixed Mode Priority Select. If 0 upper ones will be chosen, IDEIRQ# priority always higher than REQ4#

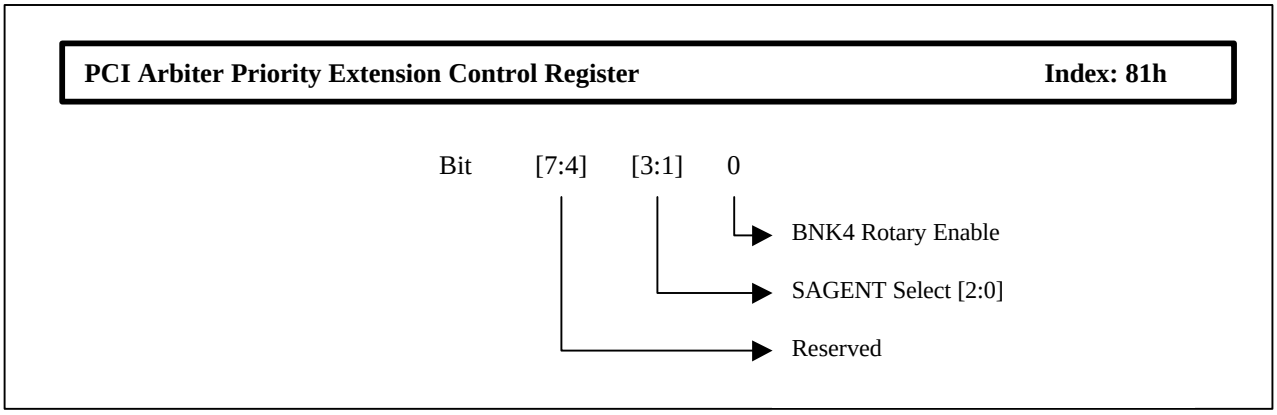

PCI Arbiter Priority Extension Control Register (default = 01h)

Type: Read/Write

Bit Description:

Bits [7:4]: Reserved

Bits [3:1]: Super Agent Select [2:0].

000 DISABLE	100 REQ0#
001 IDEIRQ#	101 REQ1#
010 SIOIRQ#	110 REQ2#
011 CPUREQ#	111 REQ3#

Bits 0: Bank 4 Rotate Enable. Defaults to 1b (enabled).

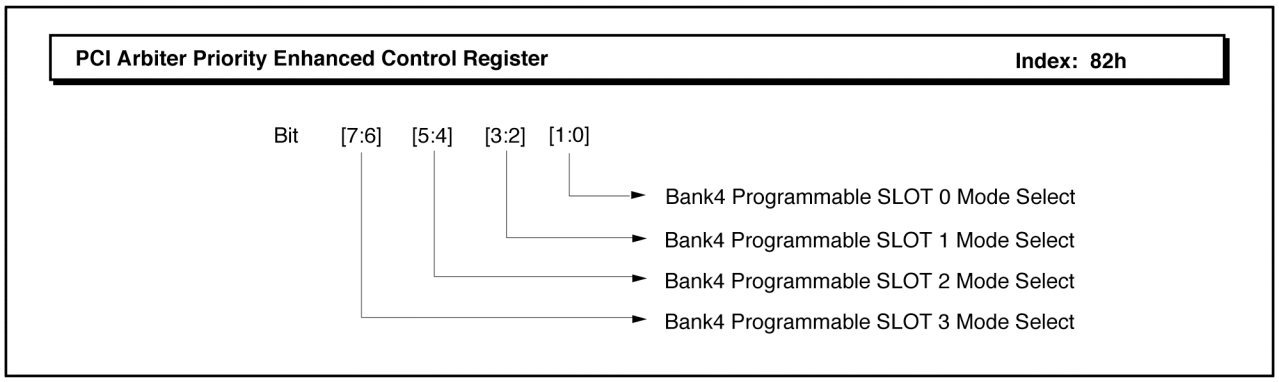

PCI Arbiter Priority Enhanced Control Register (default = 00h)

Type: Read/Write

Bit Description:

Bits [7:6]: Bank 4 Programmable Slot 3 Select [1:0].

Bits [5:4]: Bank 4 Programmable Slot 2 Select [1:0].

Bits [3:2]: Bank 4 Programmable Slot 1 Select [1:0].

Bits [1:0]: Bank 4 Programmable Slot 0 Select [1:0].

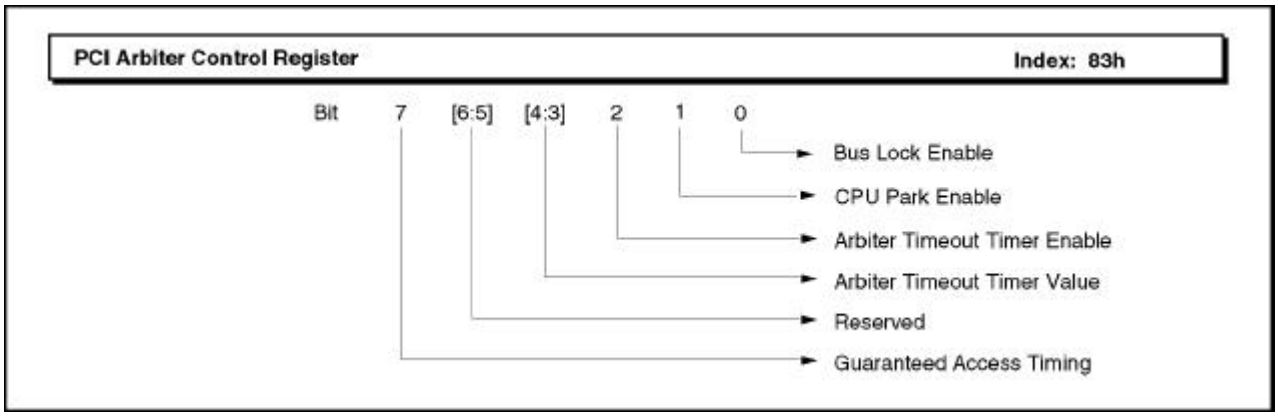

PCI Arbiter Control Register (default = 80h)

Type: Read/Write

Bit Description:

Bit 7: GAT. Guaranteed Access Timing. If set to a 1b, this bit enables Function 0 Flush Request and Flush Acknowledge operation on pins 6 and 7 (provided pin 13 is not pulled low after reset). This bit defaults to a 1b.

Bit [6:5]: Reserved.

Bits [4:3]: Arbiter Timeout Timer Value [2:0]

Number of clocks to wait for FRAME# to asset after GNT# is asserted

00 ATO time out after 16 clocks

01 ATO time out after 4 clocks

10 ATO time out after 8 clocks

11 ATO time out after 32 clocks

Bit 2: Arbiter Timeout Timer Enable.

Bit 1: CPU Park Enable. Otherwise the arbiter will park on the last master. 0=Enable.

Bit 0: Bus Lock Enable. If set to 1b, this bit converts a PCI Lock cycle to a bus lock. If this bit is 0b, the PCI arbiter ignores the LOCK# signal on the PCI bus.

4.2 ISA Bridge (Function 0) I/O Registers

4.2.1 DMA Controller I/O Registers

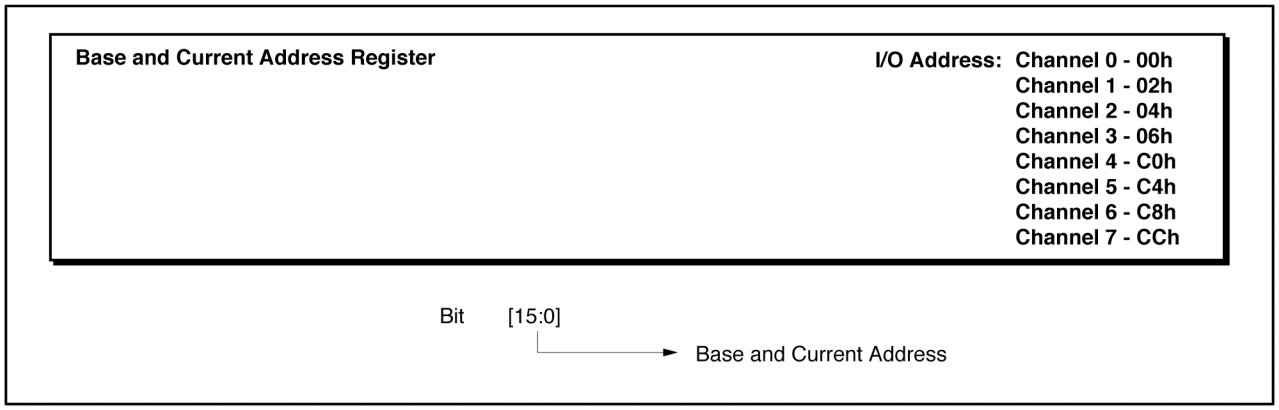

Base and Current Address Register

Type: Read/Write

Bit Description:

Bits [15:0]: Base and Current Address. Access by two consecutive cycles. Internal high/low byte pointer toggles after each access.

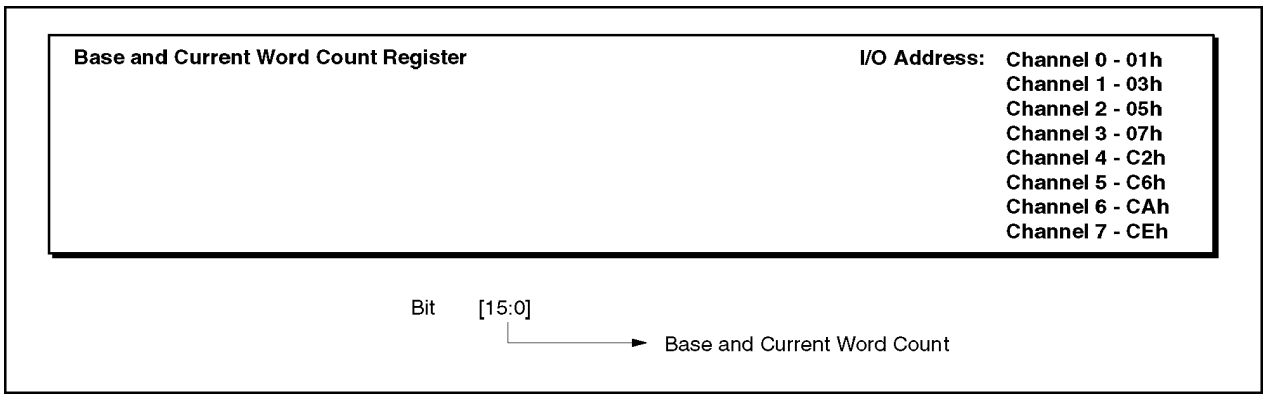

Base and Current Word Count Register

Type: Read/Write

Bit Description:

Bits [15:0]: Base and Current Word Count. Access by two consecutive cycles. Internal high/low byte pointer toggles after each access.

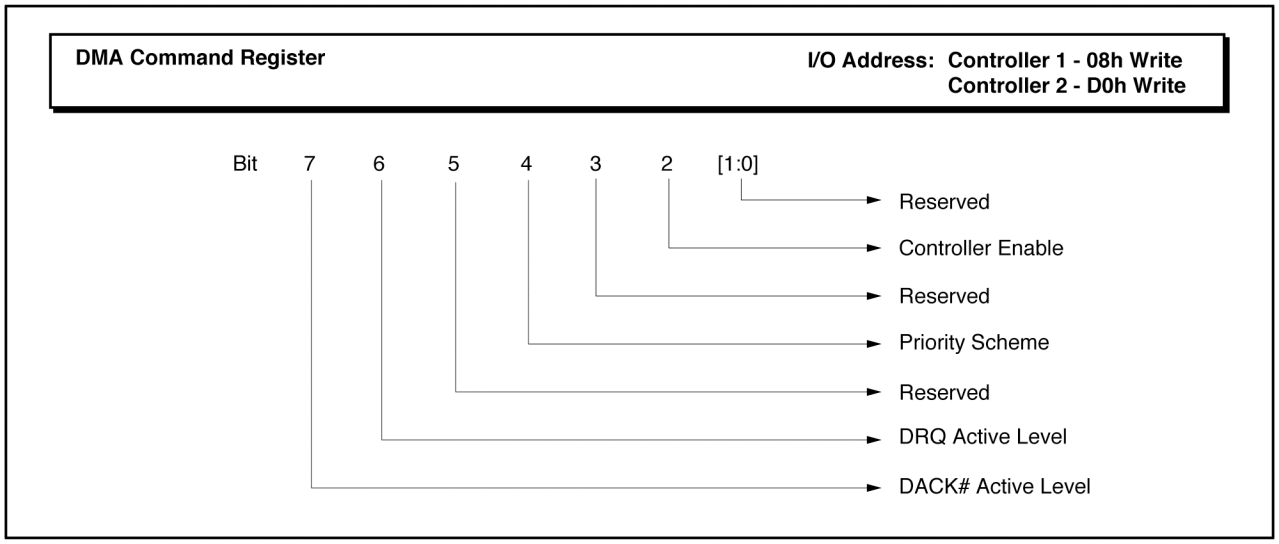

DMA Command Register (default = 00h)

Type: Write only

Bit Description:

Bit 7: Reserved.

Bit 6: DRQ Active Level. When this bit is "0" (default), DRQ is active high. When this bit is "1," DRQ is active low.

Bit 5: Reserved. Extended/Late Write Select. Must be "0".

Bit 4: Priority Scheme.

0 = fixed.

1 = rotating.

Bit 3: Reserved. Compressed timing. Must be "0".

Bit 2: Controller Enable. (0=Enable; 1=Disable)

Bits [1:0]: Reserved. Memory-to-Memory Transfer Control. Must be "0".

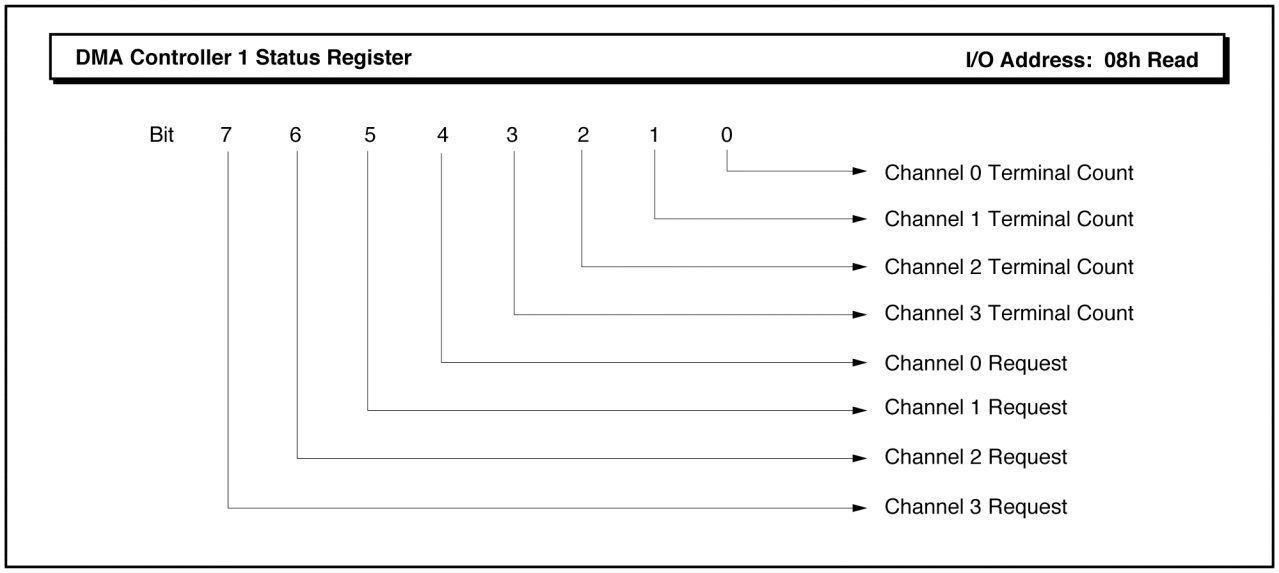

DMA Controller 1 Status Register (default = 00h)

Type: Read only

Bit Description:

Bit 7: Channel 3 Request.
Bit 6: Channel 2 Request.
Bit 5: Channel 1 Request.
Bit 4: Channel 0 Request.
Bit 3: Channel 3 Terminal Count.
Bit 2: Channel 2 Terminal Count.
Bit 1: Channel 1 Terminal Count.
Bit 0: Channel 0 Terminal Count.

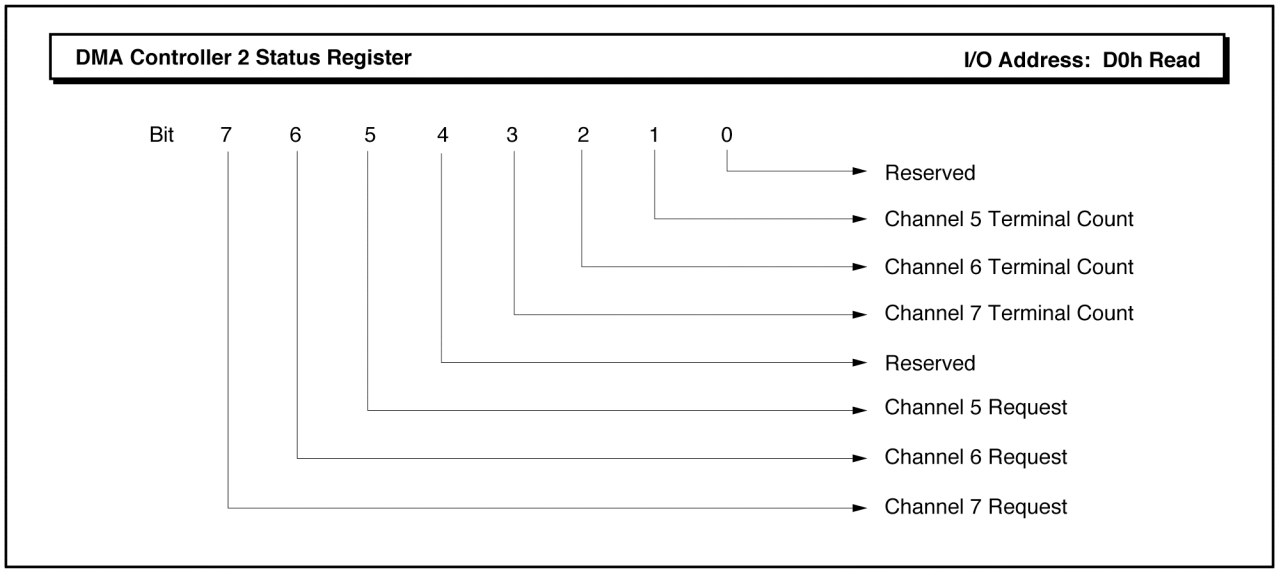

DMA Controller 2 Status Register

Type: Read only

Bit Description:

Bit 7: Channel 7 Request.
Bit 6: Channel 6 Request.
Bit 5: Channel 5 Request.
Bit 4: Reserved. Cascade for DMA Controller 1.
Bit 3: Channel 7 Terminal Count.
Bit 2: Channel 6 Terminal Count.
Bit 1: Channel 5 Terminal Count.
Bit 0: Reserved. Cascade for DMA Controller 1.

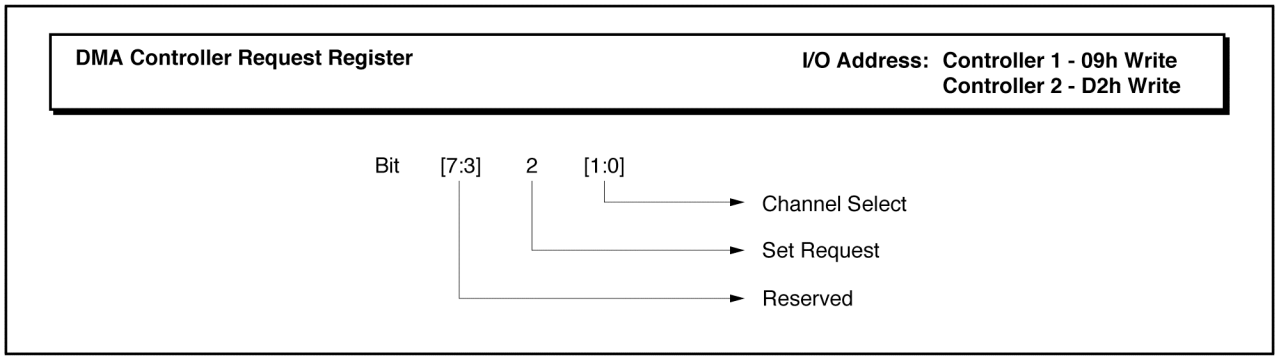

DMA Controller Request Register

Type: Write only

Bit Description:

Bits [7:3]: Reserved.
Bit 2: Set Request.
Bits [1:0]: Channel Select.

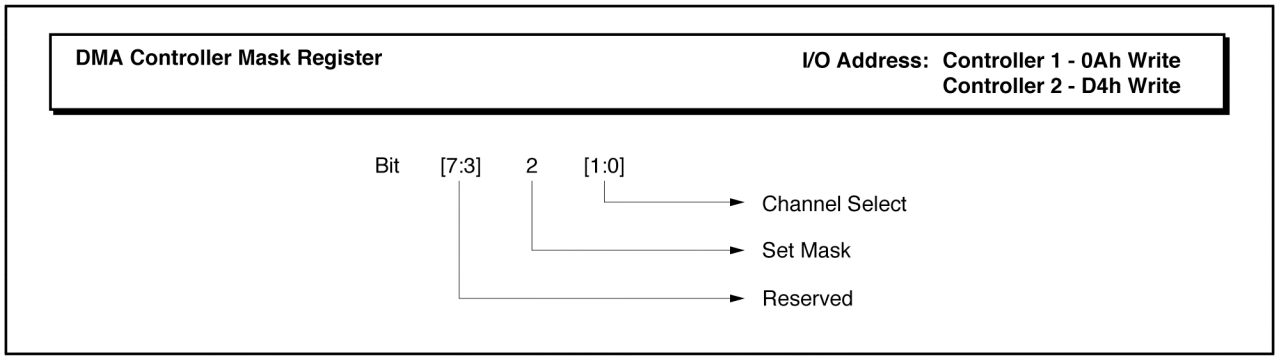

DMA Controller Mask Register

Type: Write only

Bit Description:

Bits [7:3]: Reserved.
Bit 2: SETMASK. Set Mask bit.
Bits [1:0]: CSEL [1:0]. Channel Select bits.

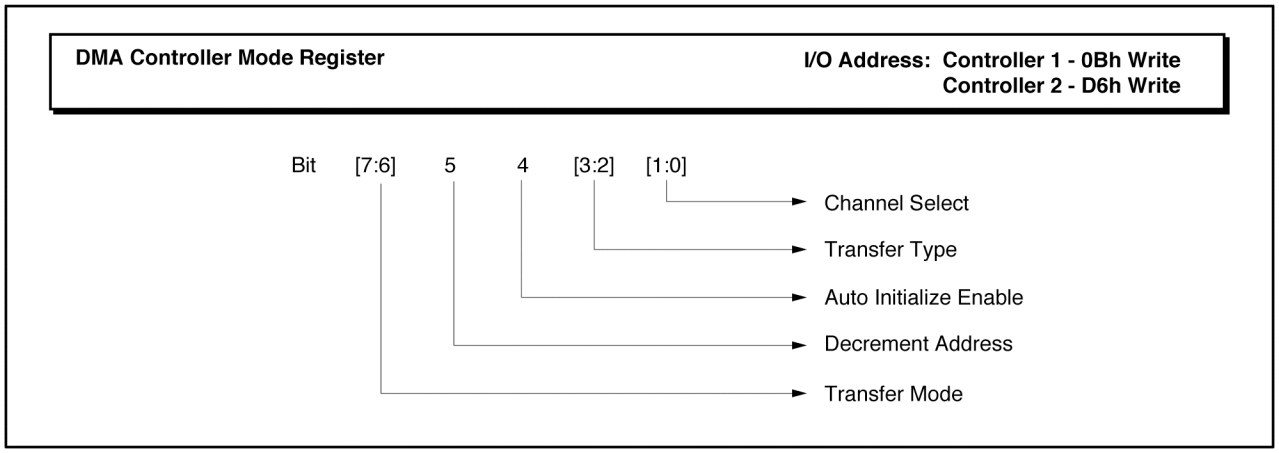

DMA Controller Mode Register

Type: Write only

Bit Description:

Bits [7:6]: Transfer Mode.

Bit 7	Bit 6		
0	0	=	Demand Mode
0	1	=	Single Mode
1	0	=	Block Mode
1	1	=	Cascade Mode

Bit 5: Decrement Address. When set to "1", address pointer is decremented after each transfer. Default is incrementing address.

Bit 4: Auto initialize Enable.

Bits [3:2]: Transfer Type.

Bit 3	Bit 2		
0	0	=	Verify
0	1	=	Write
1	0	=	Read
1	1	=	Illegal Type

Bits [1:0]: Channel Select.

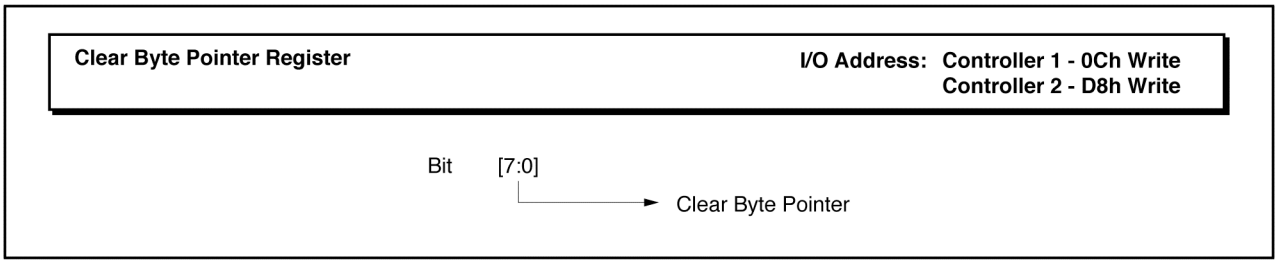

Clear Byte Pointer Register

Type: Write only

Bit Description:

Bits [7:0]: Clear Byte Pointer. Writing any pattern in this register will reset the byte pointer for the Base and Current Address/Data registers.

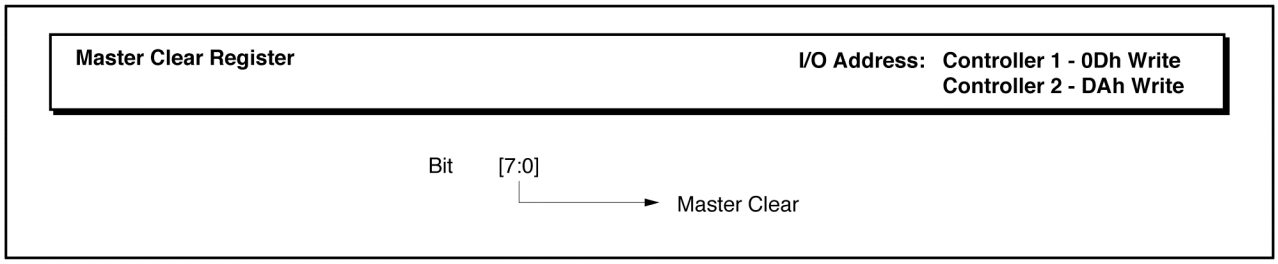

Master Clear Register

Type: Write only

Bit Description:

Bits [7:0]: Master Clear. Writing any pattern in this register will initialize the DMA controller to the same state as in a hardware reset.

Clear Mask Register

Type: Write only

Bit Description:

Bits [7:0]: Reserved. Writing this register will clear the mask bits of all channels.

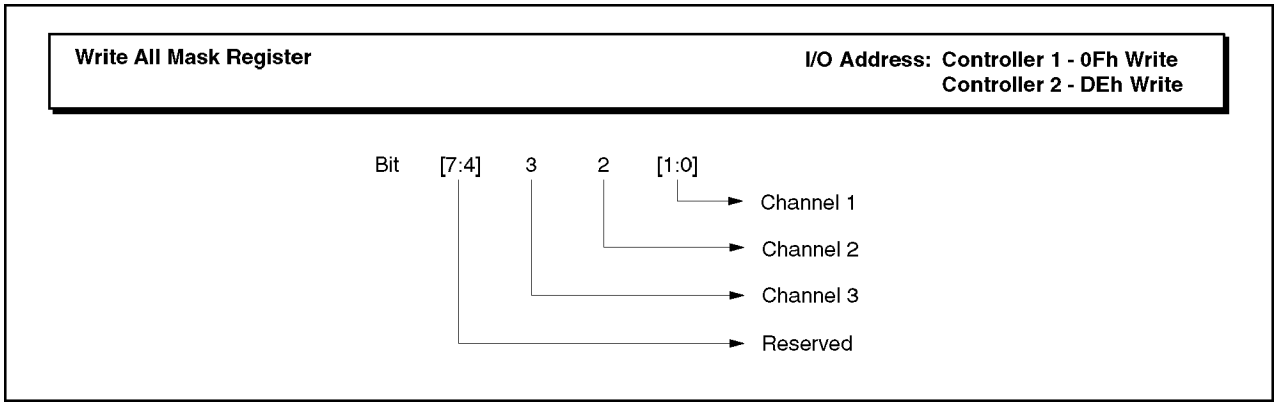

Write All Mask Register (default = 0Fh)

Type: Write only

Bit Description:

Bits [7:4]: Reserved.
Bit 3: Channel 3
Bit 2: Channel 2
Bit 1: Channel 1
Bit 0: Channel 0 0 enable, 1 mask

Memory Page Register	I/O Address:	Page 0 - 87h Page 1 - 83h Page 2 - 81h Page 3 - 82h Page 5 - 8Bh Page 6 - 89h Page 7 - 8Ah

Bit [7:0] → Memory Address 23:16 for DMA Cycles

Memory Page Register (default = 00h)

Type: Read/Write

Bit Description:

Bits [7:0]: Memory Address [23:16] for DMA cycles.

Reserved Page Register	I/O Address:	8Eh - 8Ch 88h 86h - 84h 80h

Bit [7:0] → Reserved

Reserved Page Register

Bit Description:

Bits [7:0]: Reserved. Software should not attempt to access these registers.

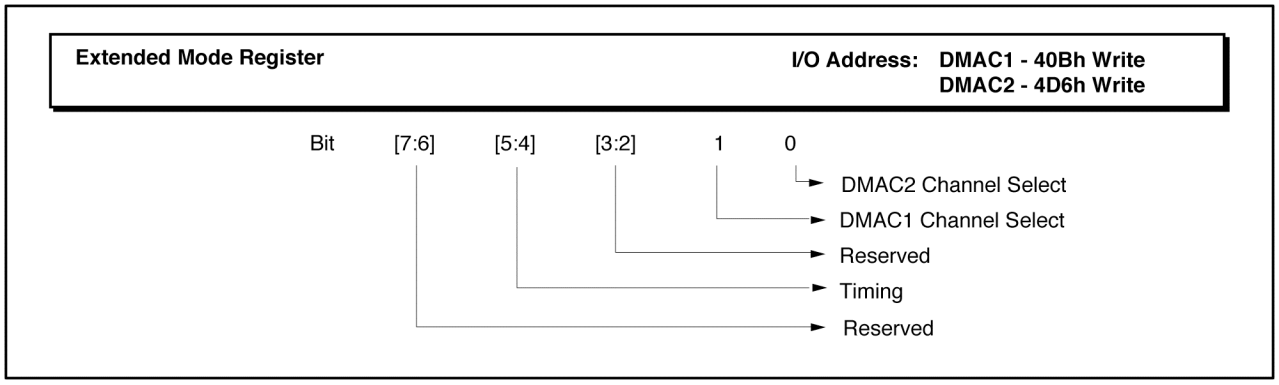

Extended Mode Register (default = 0xh)

Type: Write only

Bit Description:

Bits [7:6]: Reserved.

Bits [5:4]: Timing.

Bit 5	Bit 4	
0	0	Compatible Timing
0	1	A
1	0	B
1	1	F

Note: IOR# is 1 BCLK wide for IO to Memory DMA
Note: IOW# is 3-5BCLK wide for Memory to IO DMA

Bits [3:2]: Reserved.

Bits [1:0] DMAC[1:0] Channel Select.

Bit 1	Bit 0	DMAC1 Channel Select	DMAC2 Channel Select
0	0	0	Reserved
0	1	1	5
1	0	2	6
1	1	3	7

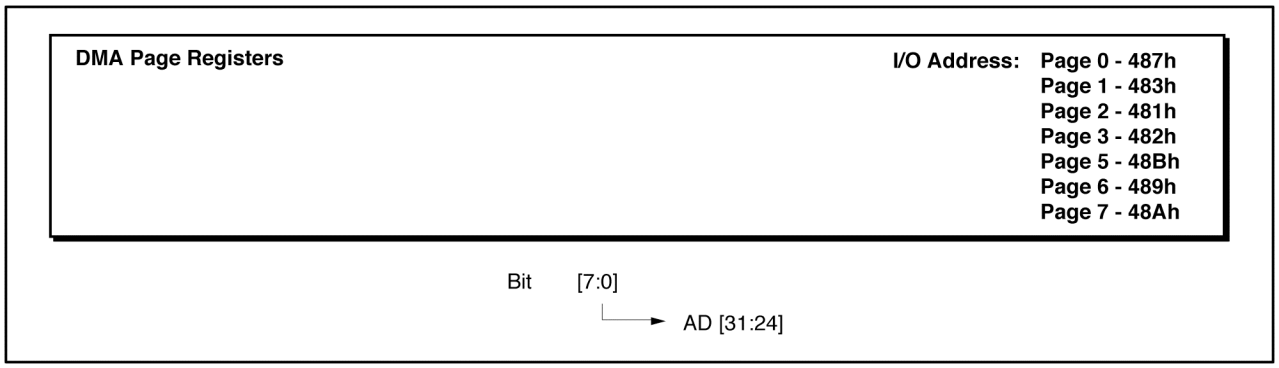

DMA Page Registers (default = 00h)

Type: Read/Write

Bit Description:

Bits [7:0]: AD[31:24].

Scatter/Gather Registers

Scatter/Gather (S/G) provides the capability of transferring multiple buffers between memory (ISA/PCI) and I/O (ISA DMA device) without CPU intervention. In Scatter/Gather the DMA can read the memory address and word count from an array of buffer descriptors located in system memory (PCI only), called the Scatter/Gather Descriptor (SCD) table. This allows the DMA controller to sustain DMA transfers until all of the buffers in the SGD table are transferred.

Software prepares a SGD table in system memory. Each SGD is 8-bytes long and consists of an address pointer to the starting address and the byte count (number of bytes) of the memory buffer to be transferred. In any given SGD table, two consecutive SGDs are offset by 8-bytes and are aligned on a 4-byte boundary. Each SGD is defined below. For an 8-bit DMA I/O device:

	31		0
Dword 0	**Memory Buffer Starting Physical Address**		
Dword 1	EOL	Reserved	Byte Count
	31	16 15	0

For a 16-bit DMA I/O device, bit 0 of the Memory Buffer Starting Address and byte count must be 0.

	31		1	0
Dword 0	**Memory Buffer Starting Physical Address [31:1]**			0
Dword 1	EOL	Reserved	Byte Count [15:1]	0
	31 30	16 15	1	0

Bit 31 of Dword 1 is the end of Link Flag. Bus master operation terminates upon completion of the description entry that has EOL set.

The SGD table cannot cross a 64k memory boundary.

The addresses of all of the registers located from 43Fh to 40Ah (except 40Bh) are relocatable by programming the Scatter/Gather Relocation Base Address Register (Function 0, address 41h) in the PCI Configuration Space. **These registers are marked with an asterisk (*).**

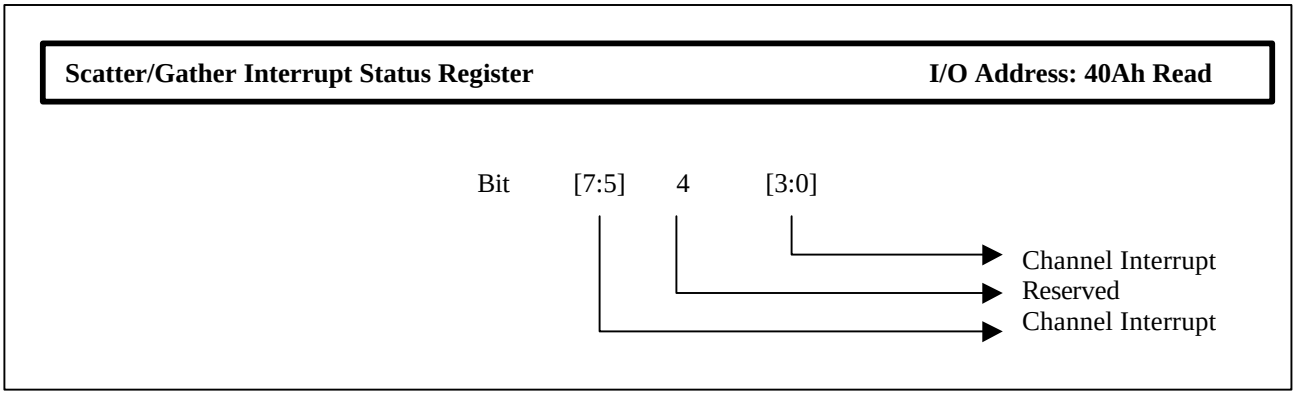

Scatter/Gather Interrupt Status Register (default = 00h)

Type: Read only

Bit Description:

Bits [7:5]:	Channel [7:5] Interrupt Status. When one of these bits is set to a 1b, Channels 7 through 5 have an interrupt due to a Scatter/Gather transfer; otherwise these bits are set to 0b.
Bit [4]	Reserved
Bits [3:0]:	Channel [3:0] Interrupt Status. When one of these bits is set to a 1b, Channels 3 through 0 have an interrupt due to a Scatter/Gather transfer; otherwise these bits are set to 0b.

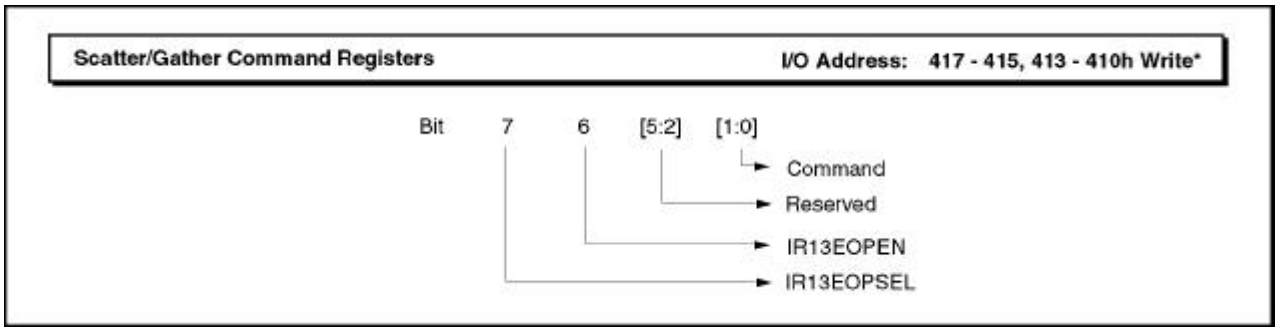

Scatter/Gather Command Registers (default = 000000h)

Function: Each of these three registers controls the Scatter/Gather operation of DMA channels [7:5].

Type: Write only

Bit Description:

Bit 7: IR13EOPSEL. IRQ13/EOP Select. If enabled via bit 6 of this register, bit 7 selects whether EOP or IRQ13 is asserted at termination caused by a last buffer expiring. If bit 7 = 1, EOP is asserted; otherwise IRQ13 is asserted.

Bit 6: IRQ13EOPEN. IRQ13/EOP Programming Enable. If bit 6 = 1, it enables IRQ13/EOP programming and allows initialization or modification of the Scatter/Gather termination handling bits.

Bits [5:2]: Reserved. Must be 0.

Bits [1:0]: Scatter/Gather Commands.

Bit 1	0	Command
0	0	No Scatter/Gather operation.
0	1	Start Scatter/Gather.
1	0	Stop Scatter/Gather. This will halt a transfer immediately.
1	1	Reserved.

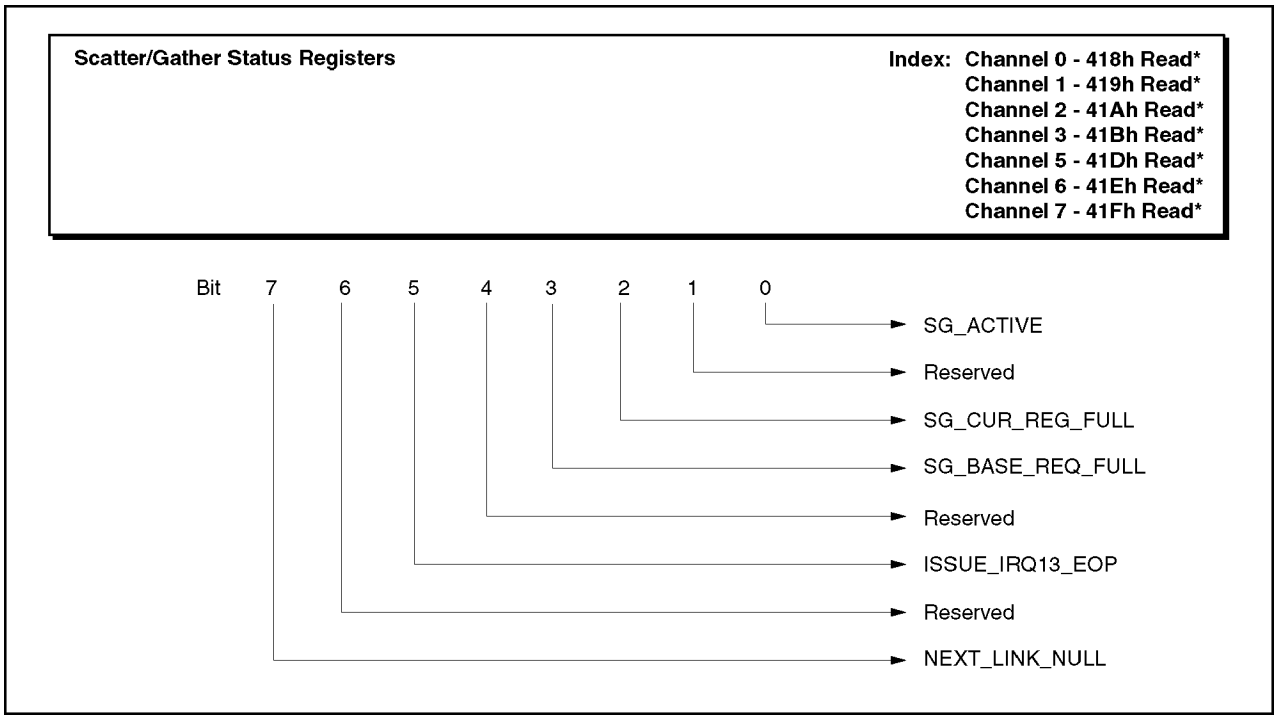

Scatter/Gather Status Registers

Type: Read only

Bit Description:

Bit 7: NEXT_LINK_NULL. Next Link Null Indicator.

Bit 6: Reserved.

Bit 5: ISSUE_IRQ13_EOP. Issue IRQ13 on last buffer. When bit 5 = 0, EOP is issued on last buffer; when bit 5 = 1, IRQ13 is issued.

Bit 4: Reserved.

Bit 3: SG_BASE_REQ_FULL. Scatter/Gather Base Register Status. When bit 3 = 0, the base register is empty; when bit 3 = 1, the base register has a buffer link loaded.

Bit 2: SG_CUR_REG_FULL. Scatter/Gather Current Register Status. When bit 2 = 0, the current register is empty; when bit 2 = 1, the current register has a buffer link loaded.

Bit 1: Reserved.

Bit 0: SG_ACTIVE. Scatter/Gather Active. This bit indicates the current Scatter/Gather transfer status. Bit 0 is set to 1 after a Scatter/Gather Start Command is issued. When bit 0 = 0, it means there is no Scatter/Gather operation.

Scatter/Gather Descriptor Table Pointer Register	I/O Address:	Channel 0 - 420h - 423h* Channel 1 - 424h - 427h* Channel 2 - 428h - 42Bh* Channel 3 - 42Ch - 42Fh* Channel 5 - 434h - 437h* Channel 6 - 438h - 43Bh* Channel 7 - 43Ch - 43Fh*

Bit [31:0] → S/G Descriptor Table Pointer

Scatter/Gather Descriptor Table Pointer Register

Type: Read/Write

Bit Description:

Bits [31:0]: SG_TBL_PTR. The Scatter/Gather Descriptor Table Pointer Register contains a 32-bit pointer address to the main memory location where the software maintains the Scatter/Gather descriptors for the linked-list buffers. Bits [31:0] correspond to A[31:0] on the PCI AD bus.

4.2.2 Programmable Interrupt Controller (PIC) Registers

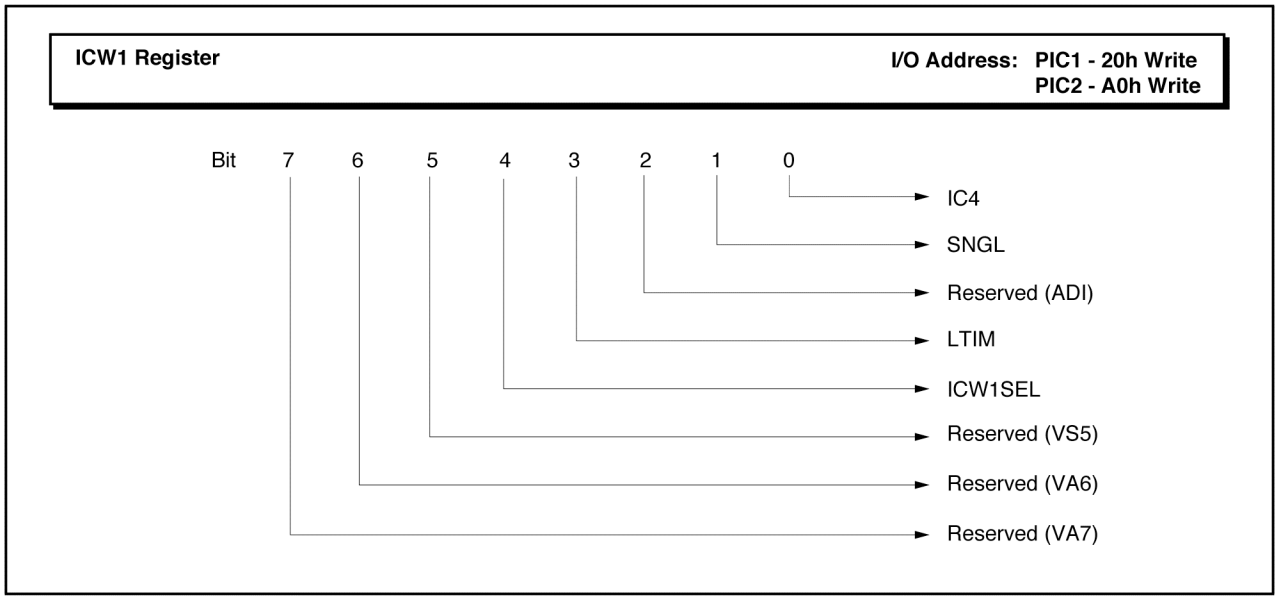

Initialization Command Word 1 Register (default = 19h)

Function: A write to the Initialization Command Word 1 (ICW1) Register starts the interrupt controller initialization sequence. Addresses 20h and A0h are referred to as the base address of Interrupt Controllers #1 and #2 respectively. An I/O write to the Interrupt Controller #1 or #2 base address, with bit 4 equal to "1," is interpreted as ICW1. For W83C553F based ISA systems, three I/O writes to "base address +1" must follow the ICW1 to perform writes to ICW2, ICW3 and ICW4.

Type: Write Only

Bit Description:

Bits [7:5]: Reserved. These bits are not needed by the W83C553F and should be "000" while programming.

Bit 4: ICW1SEL. This bit must be a "1" to select ICW1. After the fixed initialization sequence to ICW1, ICW2, ICW3 and ICW4, the controller base address is used to write to OCW2 and OCW3. Bit 4 is "0" on writes to these registers.

Bit 3: LTIM. This bit is always ignored and read as a "1."

Bit 2: Reserved (ADI). This bit is ignored by the W83C553F.

Bit 1: SNGL. This bit must be programmed to a "0," indicating the two interrupt controllers are operating in cascade mode.

Bit 0: IC4. ICSW4 Write Required. This bit must be set to a "1," indicating the ICW4 needs to be programmed (that is, the controllers are operating in an x86 type system).

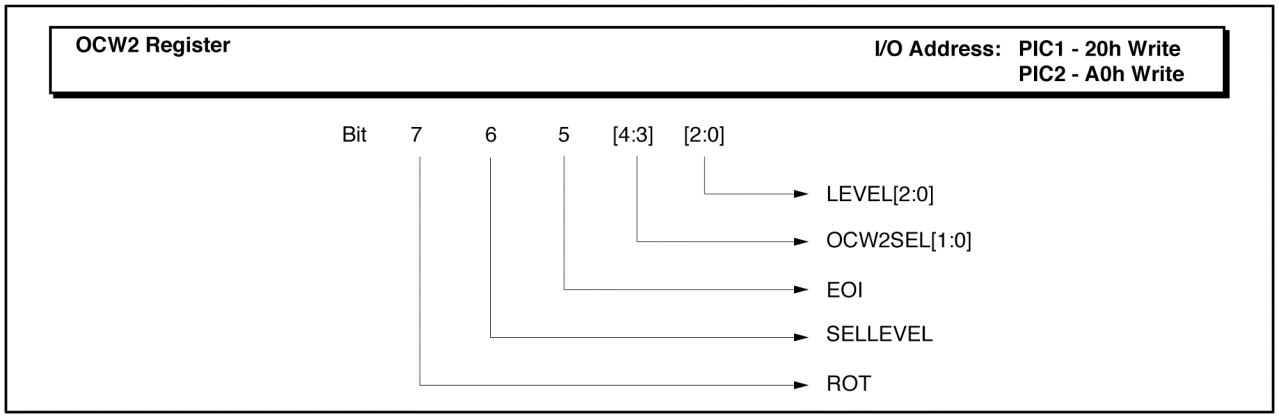

Operational Control Word 2 Register

Function: The Operational Control Word 2 (OCW2) Register controls both the Rotate Mode, End of Interrupt Mode and combinations of the two.

Type: Write Only

Bit Description:

Bits [7:5]: ROT, SELLEVEL and EOI. These three bits control the Rotate, End of Interrupt (EOI) Modes and combinations of the two, as shown below:

Bit 7	Bit 6	Bit 5	Mode
0	0	0	Rotate in Automatic EOI Mode (clear).
0	0	1	Non-specific EOI command
0	1	0	No operation
0	1	1	Specific EOI command
1	0	0	Rotate in Automatic EOI Mode (set)
1	0	1	Rotate on non-specific EOI command
1	1	0	*Set Priority Command
1	1	1	*Rotate on specific EOI command
			*Level 0 - Level 2 are used (bits [2:0])

Bits [4:3]: OCW2SEL[1:0]. OCW2 Selects. When selecting OCW2, these bits must be "00." If bit 4 is "1," the interrupt controller interprets the write to this port as an ICW1.

Bits [2:0]: LEVEL[2:0]. These bits determine the interrupt level acted upon when the SC bit (6) is active, as shown below.

Bit 2	Bit 1	Bit 0	Interrupt Level
0	0	0	IRQ0 (8)
0	0	1	IRQ1 (9)
0	1	0	IRQ2 (10)
0	1	1	IRQ3 (11)
1	0	0	IRQ4 (12)
1	0	1	IRQ5 (13)
1	1	0	IRQ6 (14)
1	1	1	IRQ7 (15)

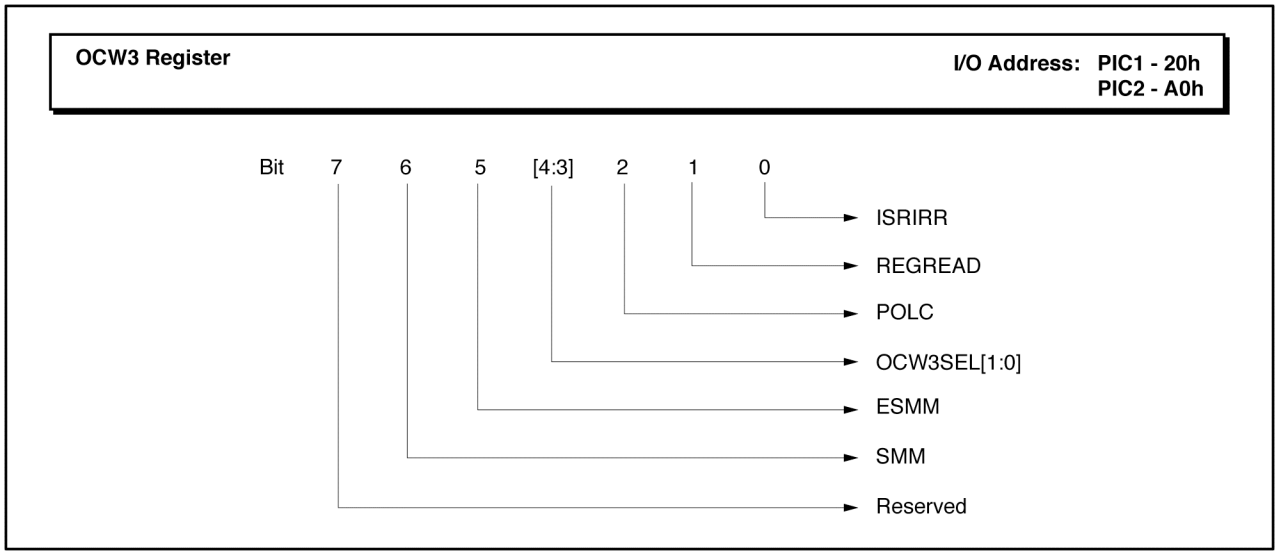

Operational Control Word 3 Register

Function: The Operational Control Word 3 (OCW3) Register serves three functions. It enables special mask mode and controls poll mode and IRR/ISR register read.

Type: Read/Write

Bit Description:

Bit 7: Reserved. This bit must be "0."

Bit 6: SMM. Special Mask Mode. If ESMM and SMM are both "1," the interrupt controller enters SMM. If ESMM is "1" and SMM is "0," the interrupt controller is in normal mask mode. When ESMM is "0," SMM has no effect.

Bit 5: ESMM. Enable Special Mask Mode. If ESMM is "1," the SMM bit is enabled to set or reset Special Mask Mode. If ESMM is "0," the SMM bit is a "don't care."

Bits [4:3]: OCW3SEL[1:0]. OCW3 Select. Always ensure bit 4 is "0" and bit 3 is "1" when writing an OCW3.

Bit 2: POLC. When this Poll Mode Command bit is "0," the Poll Command is not issured. When this bit is "1," the next I/O read to the interrupt controller is treated as an interrupt acknowledge cycle.

Bits [1:0]: REGREAD and ISRIRR. These Register Read Command bits provide control for reading the In-Service Register (ISR) and Interrupt Request Register (IRR), as shown below.

Bit 1	Bit 0	Function
0	0	No action
0	1	No action
1	0	Read IRQ register IRR
1	1	Read IS register ISR

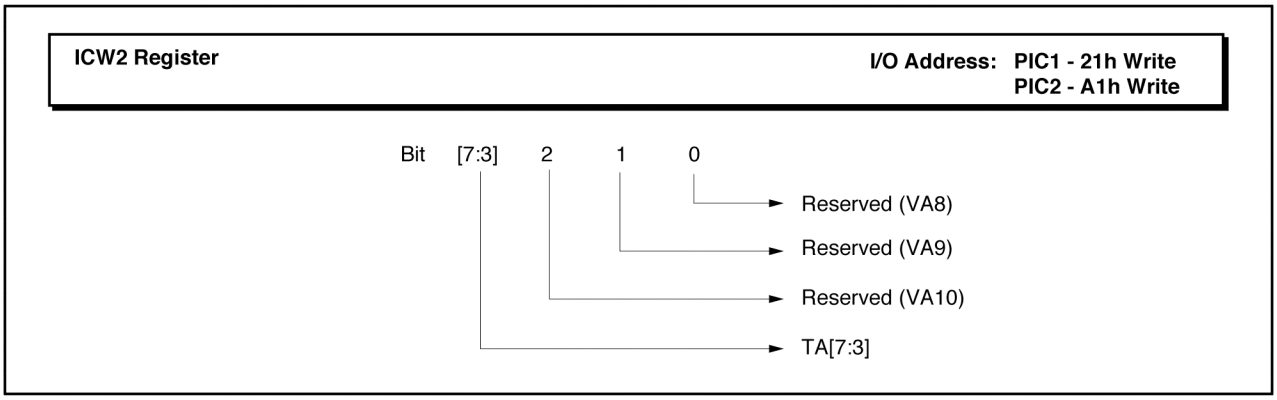

Initialization Command Word 2 Register

Function: The Initialization Command Word 2 (ICW2) Register is used to initialize the interrupt controller with the five most significant bits of the interrupt vector address. The value programmed into bits [7:3] is used by the host CPU to define the base address in the interrupt vector table for the interrupt routines associated with each IRQ on the controller.

Type: Write Only

Bit Description:

Bits [7:3]: TA[7:3]. Interrupt Vector Base Address. These bits define the base address in the interrupt vector table for the interrupt routines associated with each interrupt request level input. For Interrupt Controller #1, a typical value is "00001;" for Interrupt Controller #2, a typical value is "10000."

Bits [2:0]: Reserved. Interrupt Request Level. When writing ICW2, these bits should all be "0." During an interrupt acknowledge cycle, these bits are coded with a simple binary value determining which IRQ is enable.

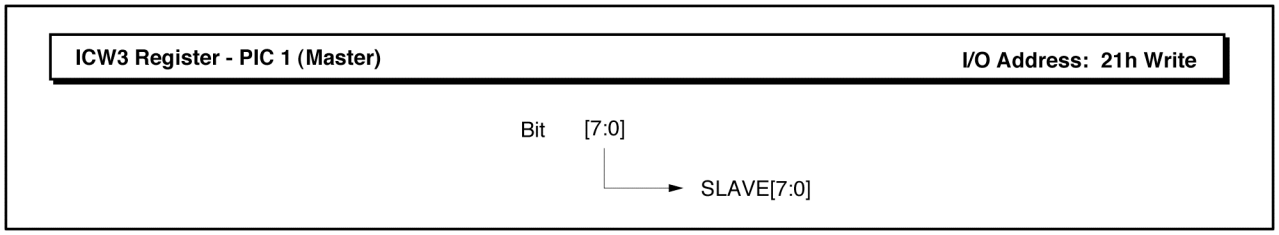

Initialization Command Word 3 Register - PIC 1 (Master, default = 04h)

Function: On the Interrupt Controller #1 (the master controller), this register indicates which IRQ line physically connects the INT output of Interrupt Controller #2 (PIC 2) to Interrupt Controller #1 (PIC 1).

Type: Write Only

Bit Description:

Bits [7:3]: SLAVE[7:3]. These bits must be programmed to "00000."

Bit 2: SLAVE2. Cascaded Interrupt Controller IRQ Connection. This bit must always be programmed to "1." It indicates the slave controller (#2) is cascaded on IRQ2.

Bits [1:0]: SLAVE[1:0]. These bits must be programmed to "00."

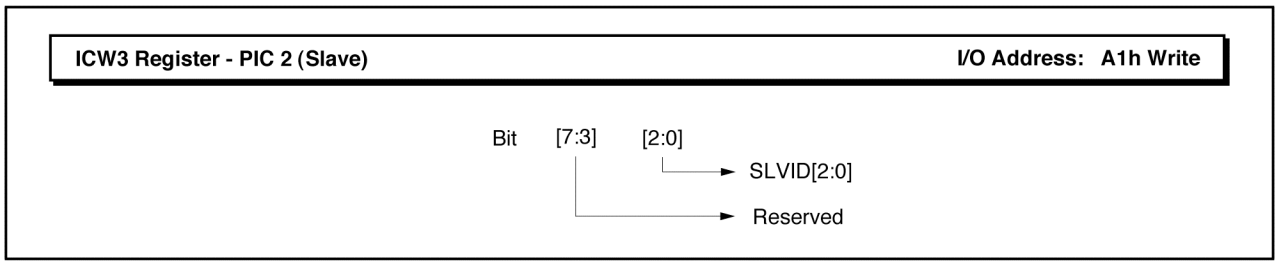

Initialization Command Word 3 Register - PIC 2 (Slave)

Function: On the Interrupt Controller #2 (the slave controller), this register contains the slave identification code broadcast by Interrupt Controller #1 from the trailing edge of the first INTA# pulse to the trailing edge of the second INTA# pulse. It must be programmed to 02h for Interrupt Controller #2.

Type: Write Only

Bit Description:

Bits [7:3]: Reserved. These bits must be programmed to "00000."

Bits [2:0]: SLVID[2:0]. Slave Identification Code. During the initialization sequence, bits 2 and 0 must be programmed to "0" and bit 1 programmed to a "1."

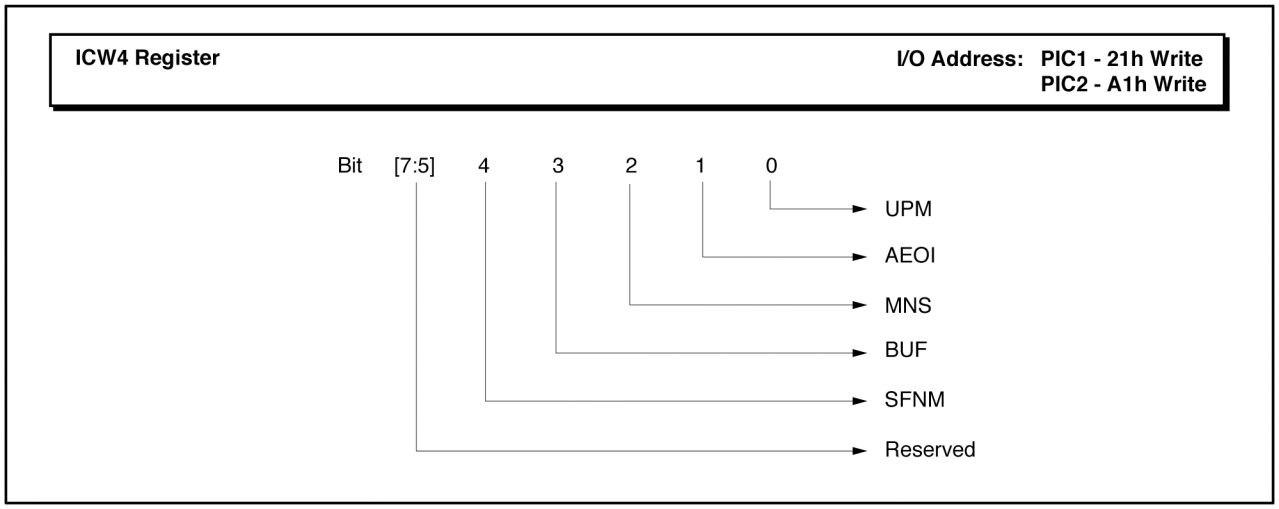

Initialization Command Word 4 Register

Function: Both interrupt controllers must have the Initialization Command Word 4 (ICW4) Register programmed as part of their initialization sequence. At a minimum, bit 0 must be set to "1" to indicate it is operating in an x86-based system.

Type: Write Only

Bit Description:

Bits [7:5]: Reserved. These bits must be programmed to "000."

Bit 4: SFNM. Special Fully Nested Mode. This mode should normally be disabled by writing "0" to this bit.

Bit 3: BUF. Buffered Mode. This bit must be programmed to "0" for the W83C553F.

Bit 2: MNS. Master/Slave in Buffered Mode. This bit must be programmed to "0" for the W83C553F.

Bit 1: AEOI. Automatic End of Interrupt. This bit should normally be programmed to "0." If programmed to "1," Automatic End of Interrupt Mode is enabled.

Bit 0: UPM. Microprocessor Mode. This bit must be set to "1" to indicate the interrupt controller is operating in an x86-based system.

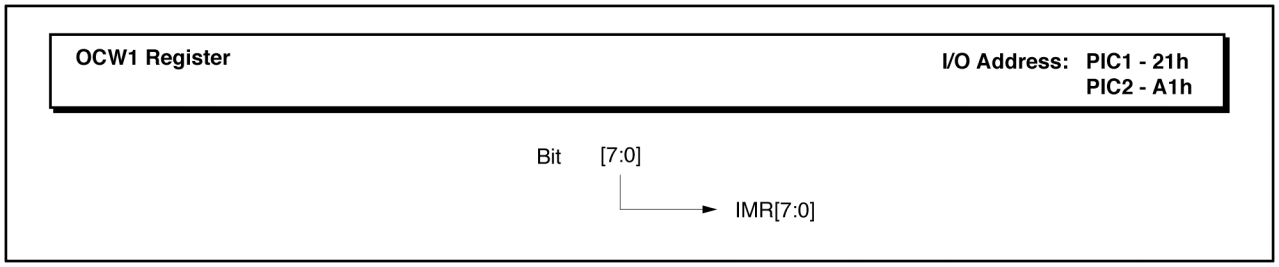

Operational Control Word 1 Register

Function: The Operational Control Word 1 (OCW1) Register sets and clears the mask bits in the Interrupt Mask (IMR) Register. Each interrupt request line may be selectively masked or unmasked any time after initialization.

Type: Read/Write

Bit Description:

Bits [7:0]: IMR[7:0]. When a "1" is written to any bit in this register, the corresponding IRQx line is masked. When a "0" is written to any bit in this register, the corresponding IRQx mask bit is cleared and interrupt requests will again be accepted by the controller.

Note: Masking IRQ2 on 21h will also mask interrupt requests from A1h, which is physically cascaded to IRQ2.

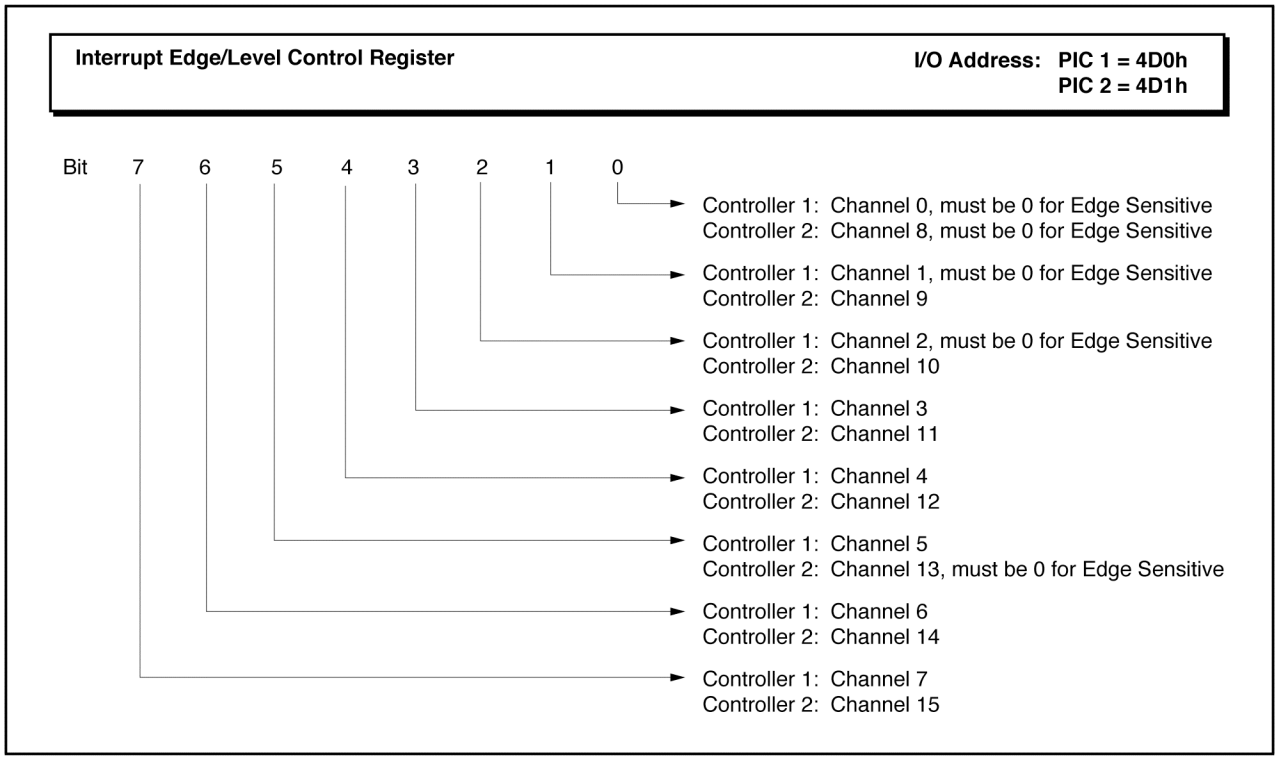

Interrupt Edge/Level Control Register (default = 00h)

Type: Read/Write

Bit Description:

Bit 7: Controller 1-Channel 7. Controller 2-Channel 15.
Bit 6: Controller 1-Channel 6. Controller 2-Channel 14.
Bit 5: Controller 1-Channel 5. Controller 2-Channel 13; must be "0" for edge.
Bit 4: Controller 1-Channel 4. Controller 2-Channel 12.
Bit 3: Controller 1-Channel 3. Controller 2-Channel 11.
Bit 2: Controller 1-Channel 2; must be "0" for edge. Controller 2-Channel 10.
Bit 1: Controller 1-Channel 1; must be "0" for edge. Controller 2-Channel 9.
Bit 0: Controller 1-Channel 0; must be "0" for edge. Controller 2-Channel 8; must be "0" for edge.

4.2.3 Counter/Timer I/O Registers

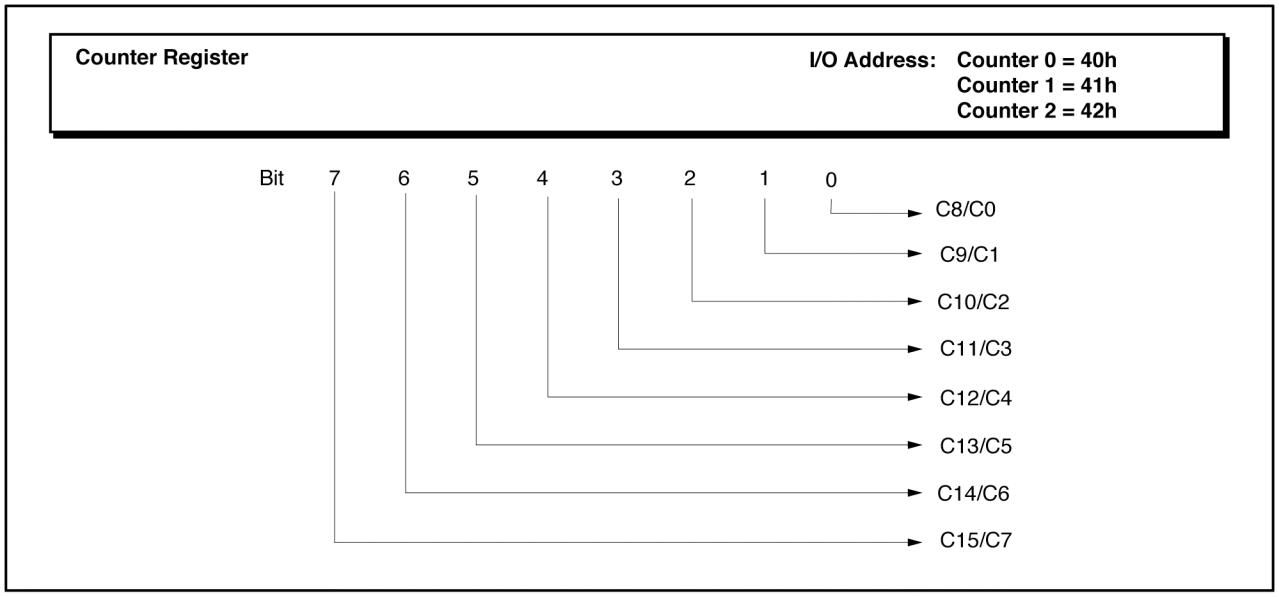

Counter Register

Function: These three registers contain the actual counter values programmed into counters 0 through 2. The set values are determined by selections made in the Timer Control Register (43h).

Type: Read/Write

Bit Description:

Bits [7:0] C[15:8]/C[7:0]. Upper and lower counter values.

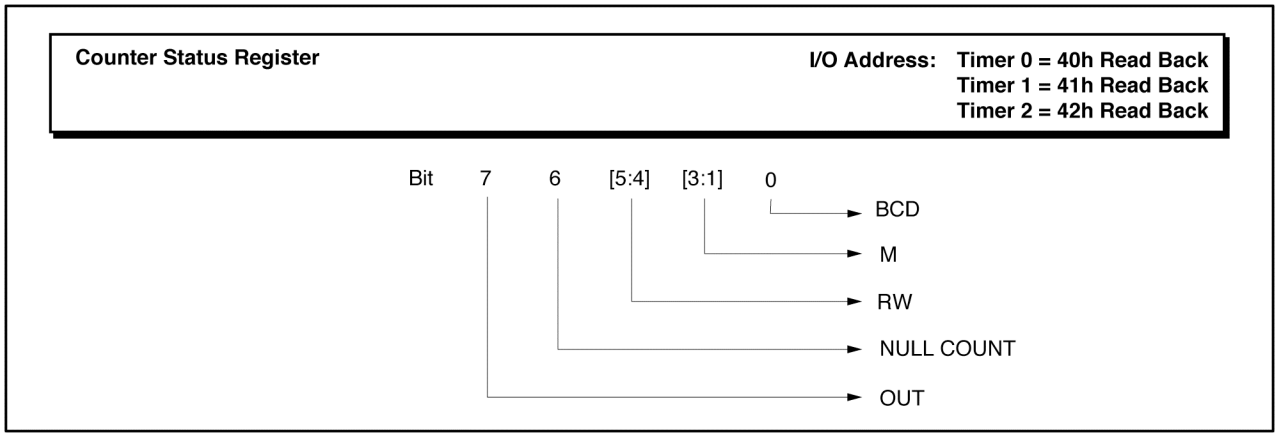

Counter Status Register

Function: Each counter's status byte can be read following a timer Read Back command, as programmed in the Timer Control Register (43h).

Type: Read back

Bit Description:

Bit 7: OUT. Count Out Status. This bit indicates the Counter Out pin state. When set to "1", the OUT pin of the counter is also a "1". When set to "0", the OUT pin of the counter is also a "0".

Bit 6: NULLCOUNT.

Bits [5:4]: R/W. Read/Write Selection Status. These bits reflect the read/write selection made through bits [5:4] of the control register. The binary codes returned, during the status read, match the codes used to program the counter read/write selection.

Bit 5	Bit 4	Function
0	0	Counter Latch command
0	1	R/W Least Significant Byte (LSB)
1	0	R/W Most Significant Byte (MSB)
1	1	R/W LSB then MSB

Bits [3:1]: M. The Mode Selection Status bits return the counter mode programming. The binary code returned matches the code used to program the counter mode, as listed under the bit function above.

Bit 3	Bit 2	Bit 1	Mode
0	0	0	0
0	0	1	1
x	1	0	2
x	1	1	3
1	0	0	4
1	0	1	5

Bit 0: BCD. The countdown method is binary when this bit is "0", and Binary Coded Decimal (BCD) when this bit is "1".

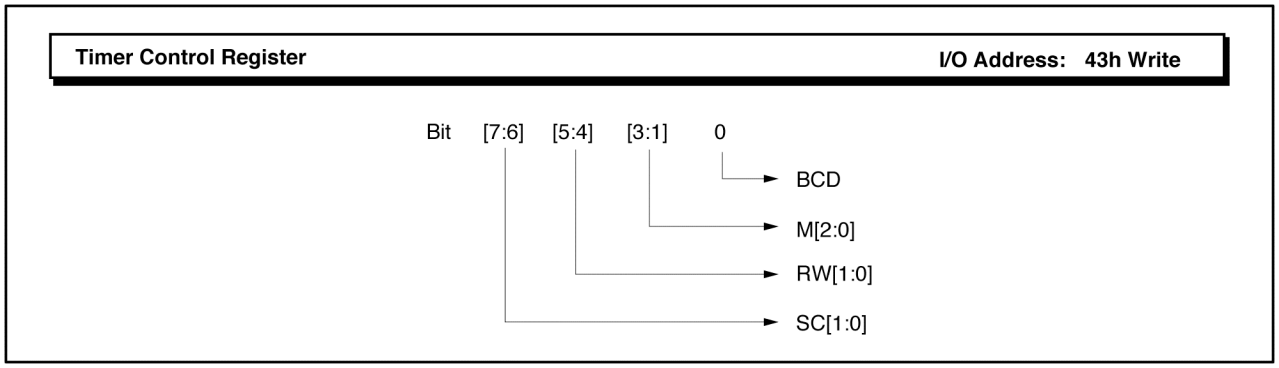

Timer Control Register

Function: The Timer Control Register specifies the counter selection, operating mode, counter byte programming order and count value size, and whether the counter counts down in a 16-bit or Binary Coded Decimal (BCD) format. After writing the control word, a new count can be written at any time. The new value will take effect according to the programmed mode.

Type: Write Only

Bit Description:

Bits [7:6]: SC[1:0]. These bits select the counter the control word acts upon as shown below.

Bit 7	Bit 6	Function
0	0	Counter 0 select
0	1	Counter 1 select
1	0	Counter 2 select
1	1	Read Back command

Bits [5:4]: RW[1:0]. These bits are the read/write control bits. Actual counter programming is done through the counter I/O port (40h, 41h, 42h for counters 0, 1 and 2, respectively).

Bit 5	Bit 4	Function
0	0	Counter Latch command
0	1	R/W Least Significant Byte (LSB)
1	0	R/W Most Significant Byte (MSB)
1	1	R/W LSB then MSB

Bits [3:1]: M[2:0]. These bits select one of six possible modes of operation for the counter as shown below.

Bit 3	Bit 2	Bit 1	Mode	Function
0	0	0	0	Out signal on end of count (=0)
0	0	1	1	Hardware retriggerable one shot
x	1	0	2	Rate generator (divide by n counter)
x	1	1	3	Square wave output
1	0	0	4	Software triggered strobe
1	0	1	5	Hardware triggered strobe

Bit 0: BCD. When this bit is "0", a binary countdown is used. The largest possible binary count is 2^{16}. When this bit is "1", a Binary Coded Decimal (BCD) count is used. The largest BCD count allowed is 10^4.

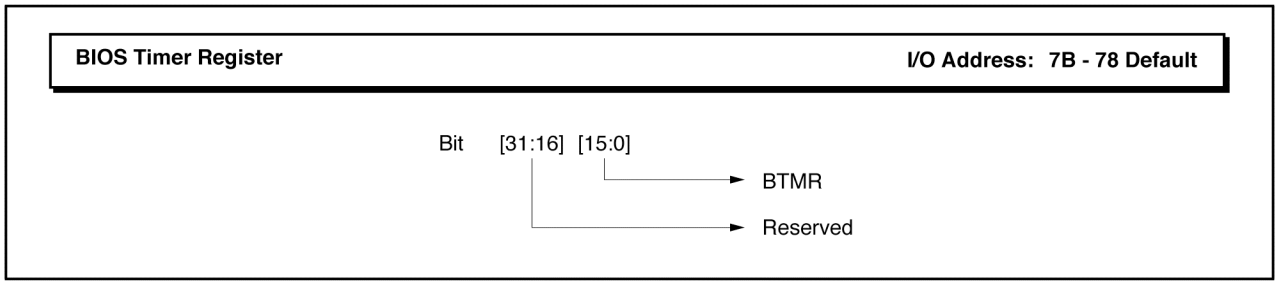

BIOS Timer Register (default = 00000000h)

Function: After a counter value is written into the lower 16 bits of this register, it will decrement to 0 with every BCLK.

Type: Default

Bit Description:

Bits [31:16]: Reserved.

Bits [15:0]: BTMR. BIOS Timer. When a counter in written into this field, the counter will be decremented by 1 every BCLK until 0 is reached.

4.2.4 Miscellaneous I/O Control Registers

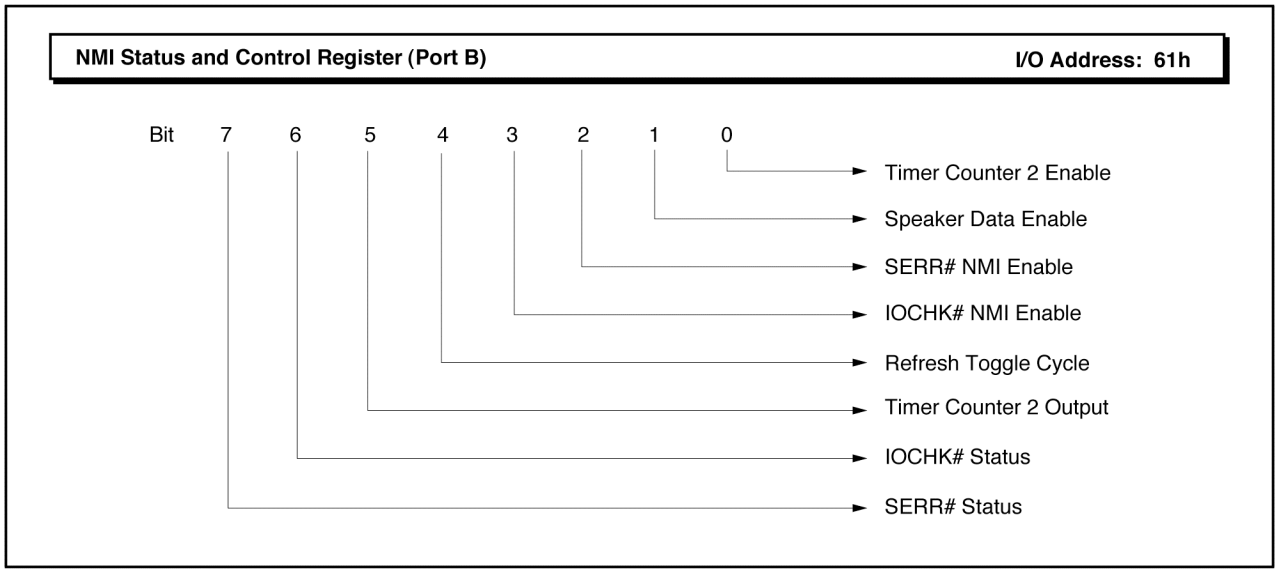

NMI Status and Control (Port B) Register (default = 00h)

Type: Read/Write

Bit Description:

Bit 7:	SERR# Status.
Bit 6:	IOCHK# Status.
Bit 5:	Timer Counter 2 Output.
Bit 4:	Refresh Cycle Toggle.
Bit 3:	IOCHK# NMI Enable.
Bit 2:	SERR# NMI Enable.
Bit 1:	Speaker Data Enable.
Bit 0:	Timer Counter 2 Enable.

Note: for Bit 3 and Bit 2, 1= Enable; 0 = Disable.

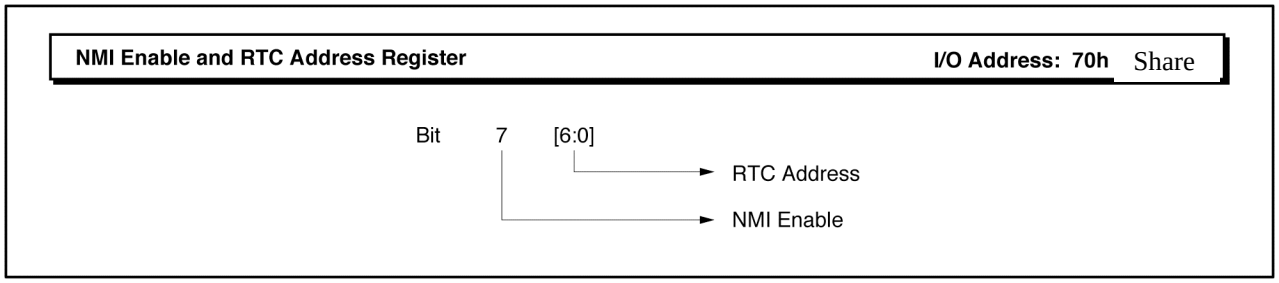

NMI Enable and RTC Address Register (default = 0xxx, xxxx)

Type: Shadow

Bit Description:

Bit 7:	NMI Enable.
Bits [6:0]:	RTC Address.

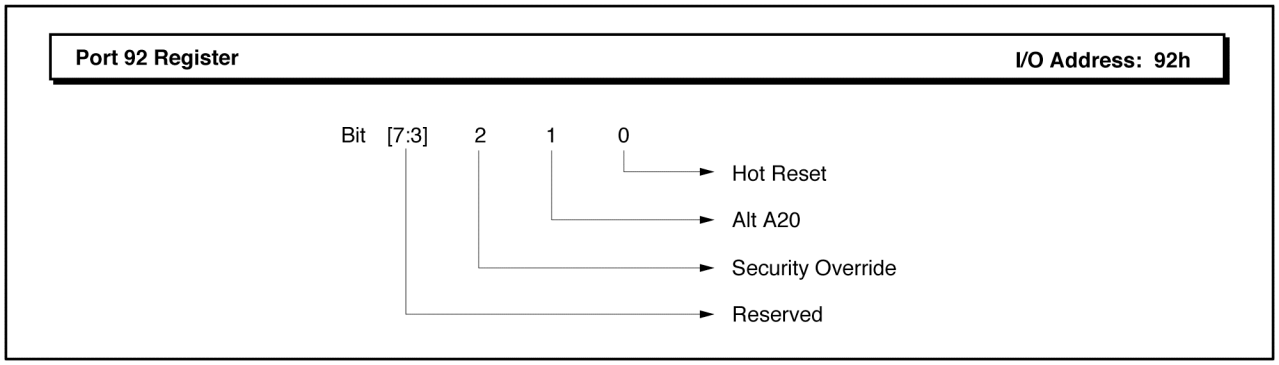

Port 92 Register (default = 24h)

Type: Read/Write

Bit Description:

Bits [7:3]: Reserved. These bits default to "00100."

Bit 2: Read only. Value of pin 116 after reset. See page 25.

Bit 1: Alt A20.

Bit 0: Hot Reset. Changing this bit from a 0 to 1 will cause a system soft reset to occur. This bit must be returned to 0 before another soft reset can be issued.

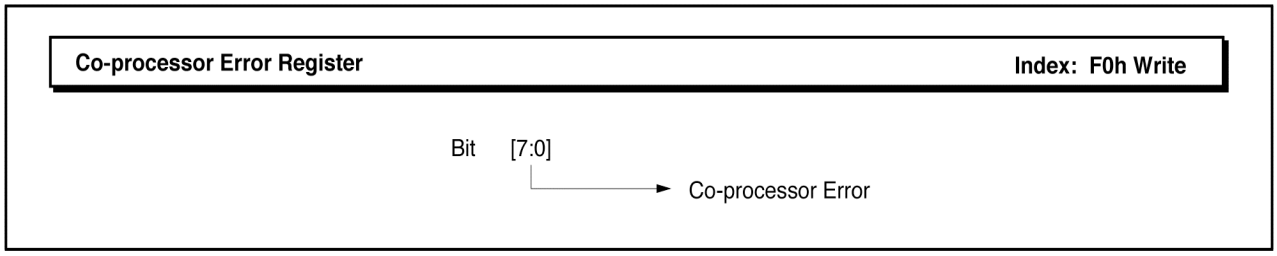

Co-processor Error Register

Type: Write only

Bit Description:

Bits [7:0]: Co-processor Error. This register only exists in x86 mode.

RTC CMOS RAM Protect 1 Register	I/O Address: 810h Write

Bit [7:0] → Any Value

RTC CMOS RAM Protect 1 Register

Type: Write only

Bit Description:

Bits [7:0]: Any value. Writing any value to this port sets a flip-flop which prevents any subsequent access to addresses 20h - 2Fh of the Real Time Clock address space. This flip-flop is cleared only on power-on reset. A read has no effect. This register's initial state after reset is in unprotected mode. This register only exists in PowerPC mode.

RTC CMOS RAM Protect 2 Register	I/O Address: 812h Write

Bit [7:0] → Any Value

RTC CMOS RAM Protect 2 Register

Type: Write only

Bit Description:

Bits [7:0]: Any value. Writing any value to this port sets a flip-flop which prevents any subsequent access to addresses 30h - 3Fh of the Real Time Clock address space. This flip-flop is cleared only on power-on reset. A read has no effect. This register's initial state after reset is in unprotected mode. This register only exists in PowerPC mode.

4.3 PCI Configuration Space - Bus Master IDE Registers (Function 1)

The configuration space is organized as 64 double word (32-bit) registers. It is divided into two sections, the PCI specified and defined Header registers and the Control registers. Header registers are located in the first 16 double words. Control registers are located in the last 48 double words.

Table 4-1. Bus Master IDE Configuration Space Header Registers

Address	Register Bits			
	31 24	23 16	15 8	7 0
03h-00h	Device ID (0105h)		Vendor ID (10ADh)	
07h-04h	Device Status		Device Control	
0Bh-08h	Base Class (01h)	Sub-Class (01h)	Programming Interface	Revision ID (05h)
0Fh-OCh	Reserved (00h)	Header Type (80h)	Latency Timer	Cache Line Size
13h-10h	Base Address 0; Port 0 Primary Registers (IDE_CS0#)			
17h-14h	Base Address 1; Port 0 Auxiliary Registers (IDE_CS1#)			
1Bh-18h	Base Address 2; Port 1 Primary Registers (IDE_CS0#)			
1Fh-1Ch	Base Address 3; Port 1 Auxiliary Registers (IDE_CS1#)			
23h-20h	Base Address 4; Bus Master IDE Registers (for DMA mode disk drives)			
3Bh-24h	Reserved (00000000h)			
3Fh-3Ch	MAX_LAT (28h)	MIN_GNT (02h)	Interrupt Pin (01h)	Interrupt Line

Table 4-2. Organization of IDE Control Registers

Address	Register Bits		
	31 24	23 16	15 8	7 0
43h-40h	IDE Control/Status Register			
47h-44h	Port 0 Drive 0 Control Register			
4Bh-48h	Port 0 Drive 1 Control Register			
4Fh-4Ch	Port 1 Drive 0 Control Register			
53h-50h	Port 1 Drive 1 Control Register			
7Bh-54h	Reserved (00000000h)			
7Fh-7Ch	Reserved			
FFh-80h	Reserved (00000000h)			

All reserved bits and bytes return a logic 0 when read. All reserved bytes written will execute normal PCI cycles, but will not affect the operation or device registers.

Internal register information for the W83C553F SIO is organized as follows:

- Register name and Index value offset from base address.
- Function of the signal.
- Type (Read and/or Write).
- Bit description.

4.3.1 Function 1 Header Registers

The registers contained in this address space are defined and required by the PCI Specification Revision 2.1. Six fields in the pre-defined header deal with device identification. These fields are Vendor ID, Device ID, Revision ID, Header Type, Class Code, and Programming Interface and their addresses are 00h-03h,08h-0Bh.

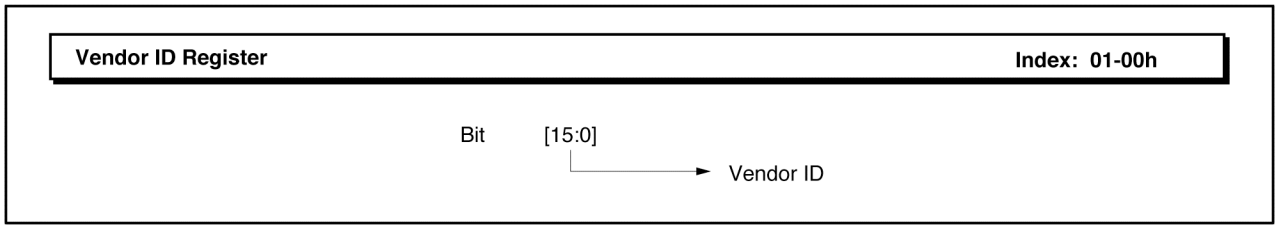

Vendor ID Register

Function: This field, containing the Vendor ID value 10ADh, identifies Symphony Labs as the manufacturer of the device. This register is read only.

Type: Read only

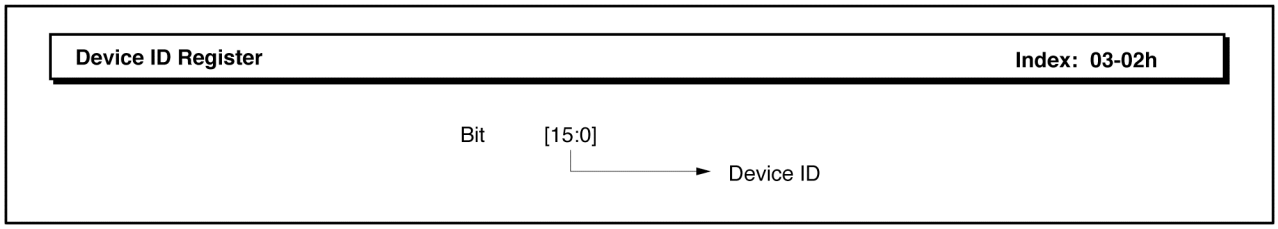

Device ID Register

Function: This field, the Device ID, will identify the Bus Master IDE device with a value of 0105h (similar to the W83789F 'Sonata' chip).

Type: Read only

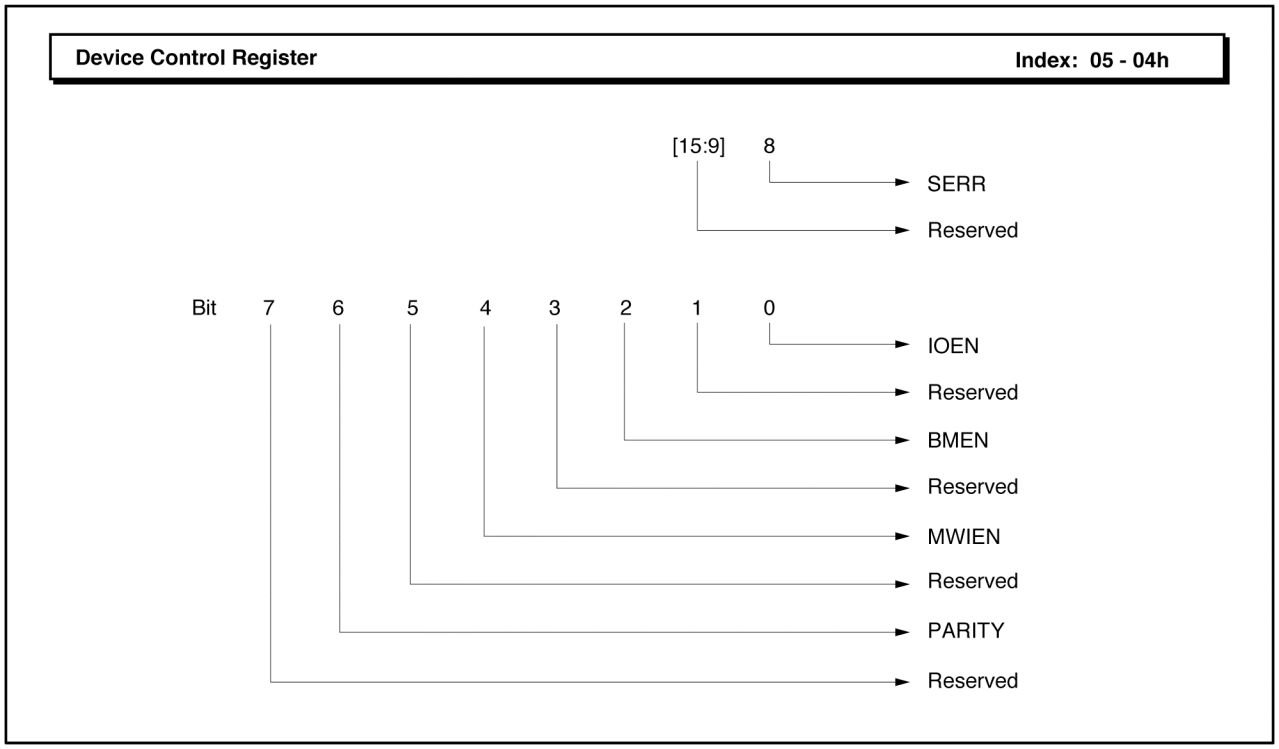

Device Control Register (default = 0000h)

Function: The Device Control Register provides coarse control over the device's ability to generate and respond to I/O cycles. Since the default value disables the IO decode, it must be programmed by the BIOS/Firmware to enable this function.

Type: Read/Write

Bit Description:

Bit [15:9]: These bits are reserved and hardwired to a logic 0b.

Bit 8: SERR. When this bit is 1b, the SERR# output driver is enabled. A system error will only be reported for address parity errors. Bit 6 PARITY must also be enabled, or no error will be reported. Bit 8 is a 0b after a reset.

Bit 7: This bit is not used and is hardwired to a logic 0b.

Bit 6: PARITY. This is the enable bit for the PERR# output driver. When bit 6 is a 1b, slave write data parity errors, and master memory read data parity errors, will be reported on PERR#. Write data parity errors are only reported for bus cycles claimed by the W83C553F (DEVSEL# asserted). Bit 6 is a 0b after a reset.

Bit 5: This bit is not used and is hardwired to a logic 0b.

Bit 4: MWIEN. When this bit is 1b, Memory write and invalidate commands are enabled, when acting as a bus master. When this bit is 0b, only memory writes can be used. This bit is a 0b after a reset.

Bit 3: This bit is not used and is hardwired to a logic 0.

Bit 2: BMEN. This bit must be set to allow the W83C553F to perform bus master cycles. Writing a 1b to this bit will set it. Also, writing a 1b to bit 0 (Start/Stop Bus Master) of the Primary or Secondary Bus Master IDE Command Register will set this bit. This bit is a 0b after a reset.

Bit 1: This bit is not used and is hardwired to a logic 0b.

Bit 0: IOEN. When bit 0 is set to a 1b, IDE I/O address decodes, based on the W83C553F's configuration, are enabled. Primary and/or secondary port I/O addresses are decoded if they are also enabled in the IDE Control/Status Register. They will be the default address range, unless the Base Address Registers are enabled and programmed. In this case, the Base Address Registers determine the addresses to be decoded.

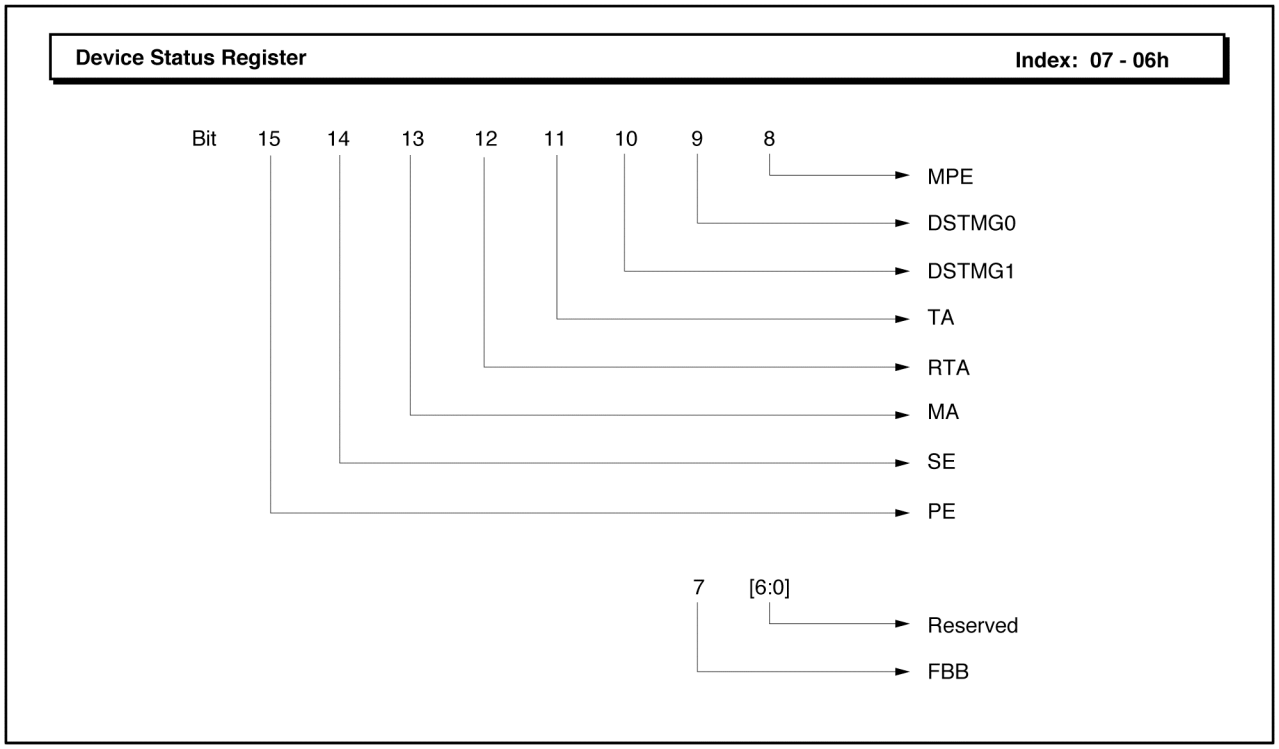

Device Status Register (default = 0280h)

Function: The Device Status Register is used to record status information for PCI bus related events. Reads to this register behave normally. Writes report slightly different, in that bits can be reset, but not set. A bit is reset whenever the register is written, and the data in the corresponding bit is a 1b. In the cases of PE, SE, MA, RTA, TA, or MPE been set, the software should write a "1" in the corresponding bit position to clear it, after recovering from the error.

Type: Read/Write

Bit Description:

Bit 15: PE. This bit is set anytime a parity error is detected during a slave data write to the W83C553F, for any command phase parity error, or when operating as a bus master for any memory read parity error. The function of this bit is not affected by the Device Control Register parity bit.

Bit 14: SE. This bit is set anytime the W83C553F asserts the SERR# output low.

Bit 13: MA. This bit will be set when operating as a bus master and a (memory) cycle is terminated with master abort.

Bit 12: RTA. This bit will be set when operating as a bus master and a (memory) cycle is terminated with target abort.

Bit 11: TA. The target abort bit will be set anytime the W83C553F terminates a slave cycle with a target abort cycle.

Bit [10:9]	DSTMG. These bits encode the timing of DEVSEL#. They are hardwired to 01b indicating the support of medium DEVSEL# timing. This allows for support of fast back-to-back PCI bus cycles. This will maximize the PCI bus bandwidth for PIO data transfer cycles.
Bit 8:	MPE. This bit will be set when operating as a bus master and either the PERR# output is driven low by the W83C553F or the target asserts PERR# and bit 6 of the Device Control Register is set.
Bit 7:	FBB. This bit will always be set. The W83C553F fully supports fast back to back transactions to different targets.
Bit [6:0]:	These bits are reserved and are hardwired to logic 0b.

Revision ID Register	Index: 08h

Bit	[15:0]
	Revision ID

Revision ID Register (default = 05h)

Function: This register specifies a device specific revision identifier. The first Symphony bus master device was 01h with subsequent bus master IDE chips being 02h, 03h, etc. This specification is written to define device revision 05h.

Type: Read only

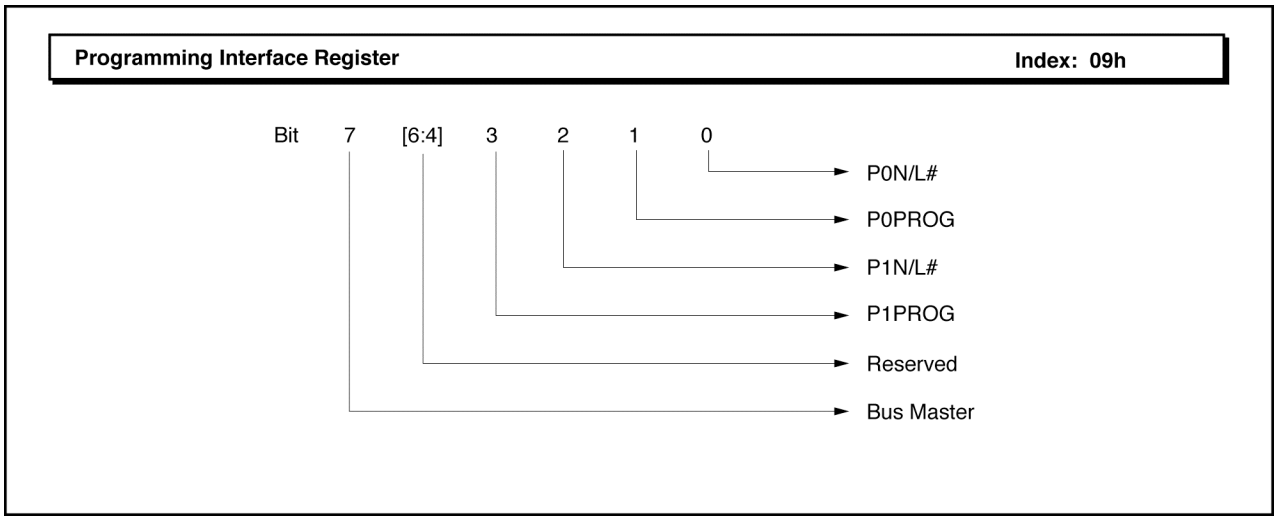

Programming Interface Register (Default = 8Ah)

Function: There are no PCI predefined configuration register sets released for this class of device but the PCI SIG has generated two proposed interfaces which are both supported. The first interface defines native and legacy IDE devices and is described in PCI Rev. 2.1 spec. The Programming Interface register will support both the native and legacy modes. Also the PCI SIG group has proposed a programming interface for Bus Master IDE controllers. This register set and protocol is fully supported as indicated by bit 7 of this register being set.

Type: Read/Write

Bit Description:

Bit 7: Bus Master. This bit is hardwired to logic 1 to indicate support of the IDE BUS MASTER register set and protocol.

Bit [6:4]: These bits are reserved and hardwired to logic 0.

Bit 3: P1PROG. Port 1 Programmable is hardwired to a 1b. This indicates that bit 2 of this register is R/W.

Bit 2: If this bit is 1b, indicating in native mode, base address register (2 and 3) can be programmed. If it is 0b, indicating legacy mode, they can not be programmed and default address will be used.

Bit 1: P0PROG. Port 0 Programmable is hardwired to a 1b. This indicates that bit 0 of this register is R/W.

Bit 0: If this bit is 1b, indicating in native mode, base address register (0 and 1) can be programmed. If it is 0b, indicating legacy mode, they can not be programmed and default address will be used.

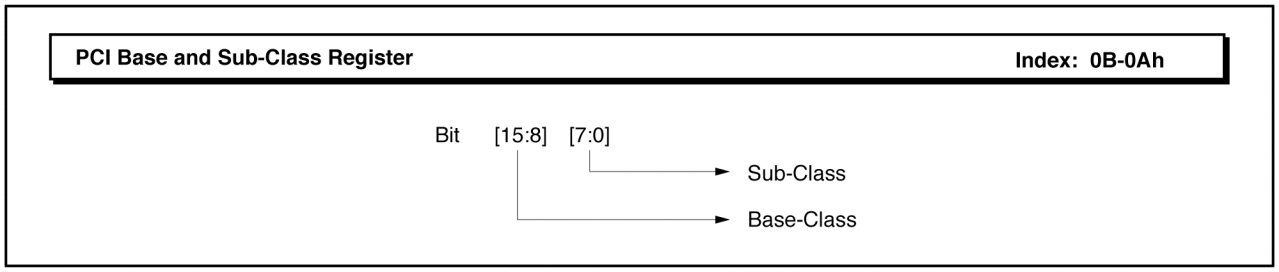

PCI Base and Sub Class Register (default = 0101h)

Type: Read only

Bit Description:

Bits [15:8]: Sub Class. Permanently defaults to 01h - “IDE Controller.”

Bits [7:0]: Base Class. Permanently defaults to 01h - “Mass Storage Controller.”

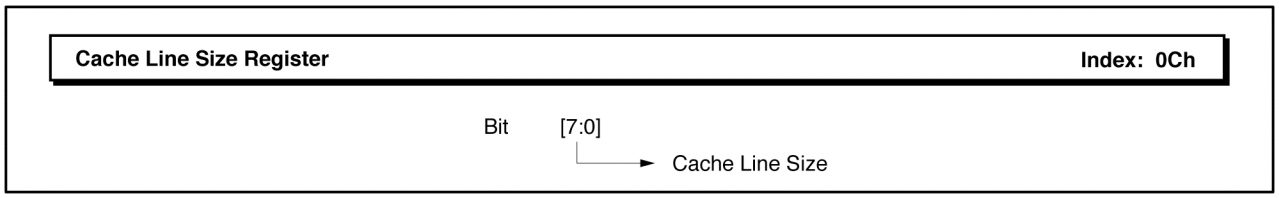

Cache Line Size Register (default = 08h)

Function: This 8-bit register is programmed by the host to the cache line size being used by the system processor. It is programmed in units of 32-bit double words. The programmed value effects the memory read and write commands executed when the W83C553F is operating as a bus master. The default value is 08h. This register can only be programmed to 04h (16 bytes), 08h (32 bytes), or 00h (4 bytes); all other values will be ignored.

Type: Read/Write

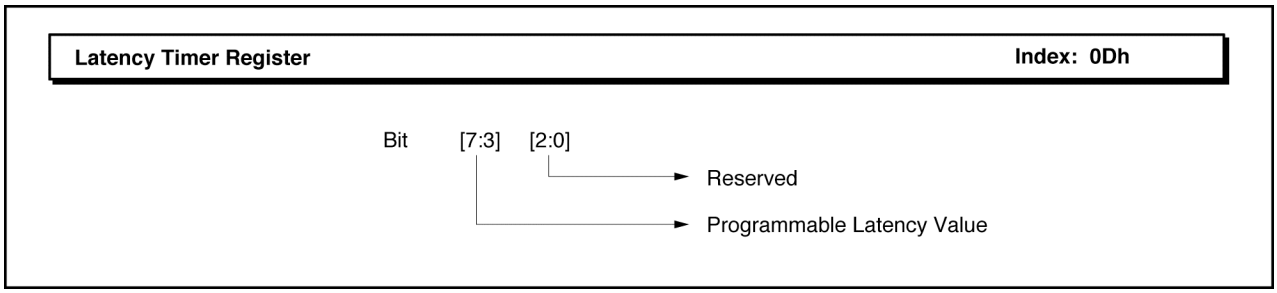

Latency Timer Register (default = 00h)

Function: This register specifies, in PCI bus clocks, the value of the latency timer when operating as a bus master. Bits 0 through 2 are hardwired to a 0b. Bits 3 through 7 are programmable allowing a programmable latency value in increments of 8 PCI clocks. The result is a timer granularity of eight clocks. This register has a default value of 00h.

Type: Read/Write

Bit Description:

Bit [7:3] High-order Timer Bits. Five programmable timer value bits.

Bit [2:0] Low-order Timer Bits. Hardwire to ground for read-only 0b values.

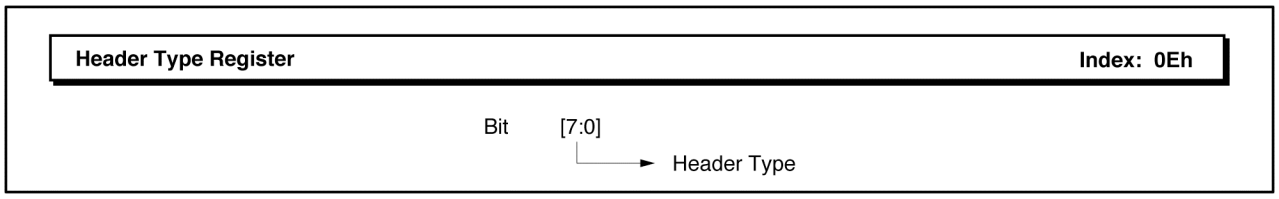

Header Type Register (default = 80h)

Type: Read only

Bit Description:

Bits [7:0]: This byte identifies the layout of bytes 10h through 3Fh in the configuration space. A default value of 80h specifies the class codes shown in Table 6-1 of the PCI Specification.

Base Address Registers 0 through 3 (10h-13h, 14h-17h, 18h-1Bh, 1Ch-1Fh)

The W83C553F can be configured to support these Base Address Registers or to disable them. This can be useful in configuring the device to operate in PCI systems that have various levels of configuration compatibility. Base Address Registers 0 and 1 are used to control the primary IDE port I/O address locations. Base Address Registers 2 and 3 are used to control the secondary IDE port I/O address locations. IOR[A:B]# and IOW[A:B]# are used with IDECS0# and IDECS1# to access the primary and second ports. Note: A Base Address register does not contain a valid address when it is equal to "0".

Table 4-3. Base Address Register Mapping

Base Address Register	Address Decode	IDE Chip Select	Default When Enabled	Value When Programmed FF FF FF FFh
0	1F0h-1F7h	IDE_CS0#	00 00 01 F1h	FF FF FF F9h
1	3F6h	IDE_CS1#	00 00 03 F5h	FF FF FF FDh
2	170h-177h	IDE_CS0#	00 00 01 71h	FF FF FF F9h
3	376h	IDE_CS1#	00 00 03 75h	FF FF FF FDh

When P0N/L# bit in Programming Interface Register is set, Base Address Register 0,1 can be programmed for relocation to any address within the 32 bit PCI I/O address space.

When P1N/L# bit in Programming Interface Register is set, Base Address Register 2,3 can be programmed for relocation to any address within the 32 bit PCI I/O address space.

The default values of all the registers are located above.

When relocating the IDE ports, the normal procedure is to first program the Base Address Register with a value of FF FF FF FFh. Next the register is read. Base Address Registers 0 and 2 will respond with a value of FF FF FF F9h indicating a decode range of 8 bytes in I/O space, while 1 and 3 will respond with a value of FF FF FF FDh indicating a decode range of 4 bytes in I/O space. Although Base Address Registers 1 and 3 indicate a decode of 4 bytes, they will only claim cycles to byte lane 2 (of 0 through 3) of the 4 byte range. This means that register accesses to 3F4h, 3F5h, 3F7h, 374h, 375h or 377h (or the equivalent offset) will not be claimed or executed.

The W83C553F will only decode IDE port addresses if the IOEN bit of the Device Control Register is high and the IDE port is enabled in the W83C553F function 1: IDE Control/Status Registers.

Base Address Register 4 (20h-23h)

This Base Address Register is used to define the I/O address of the Bus Master IDE Register set in systems which use multi-word DMA mode disk drives. This register set is internal to the W83C553F but is located in the I/O address space instead of the Configuration address space. The default value of Base Address Register 4 is 00000001h. When programmed with a value of FFFFFFFFh, a value of FFFFFFF1h will be read back indicating a required address range of 16 bytes. The Bus Master IDE Register set can be located anywhere in the 32 bit I/O address space. Since address 00 00 00 00h is the address of the motherboard DMA controller, no cycles will be claimed until Base Address Register 4 is programmed to a non-zero address and IOEN is set in the Device Control Register. The lower 4 bits are hardwired to a value of 1h. Note: A Base Address register does not contain a valid address when it is equal to "0".

Interrupt Line Register (3Ch)

The Interrupt Line register is an 8-bit register used to communicate interrupt line routing information. This register is read/write. The POST software is expected to write the appropriate routing information into this register as it initializes and configures the system. At reset, this register is set to 0Eh to indicate the desired interrupt path to the interrupt controller is through IRQ14.

Interrupt Pin Register (3Dh)

The Interrupt Pin register is an 8-bit register that defines which interrupt pin the device uses. A value of 01h is hardwired to this register to signify that INTA# is being used. This interrupt may be a PCI interrupt or an ISA interrupt (i.e. IRQ14).

Min. Grant (3Eh) and Max. Latency (3Fh) Registers

These read-only registers specify the desired latency timer value. They each represent a number of 1/4 microsecond time units.

The Min Grant is the time required to complete a worst case burst assuming a 33MHz PCI clock. The hard coded value is 02h which represents 0.5µs.

The Max Latency specifies how often the W83C553F needs to gain control of the PCI bus. The hard coded value is 28h which represents 10µs.

4.3.2 Function 1 Control Registers

These configuration registers control various features of the W83C553F and the IDE interface. Reserved registers are hardwired to a 00h and cannot be programmed. The first register controls the general features of the W83C553F and both IDE ports. The next four registers control the features and timing of the 4 individual IDE devices. All features of the IDE interface that have no effect on the performance of the mass storage subsystem have been set to fixed values in hardware (i.e.; all 8-bit timing).

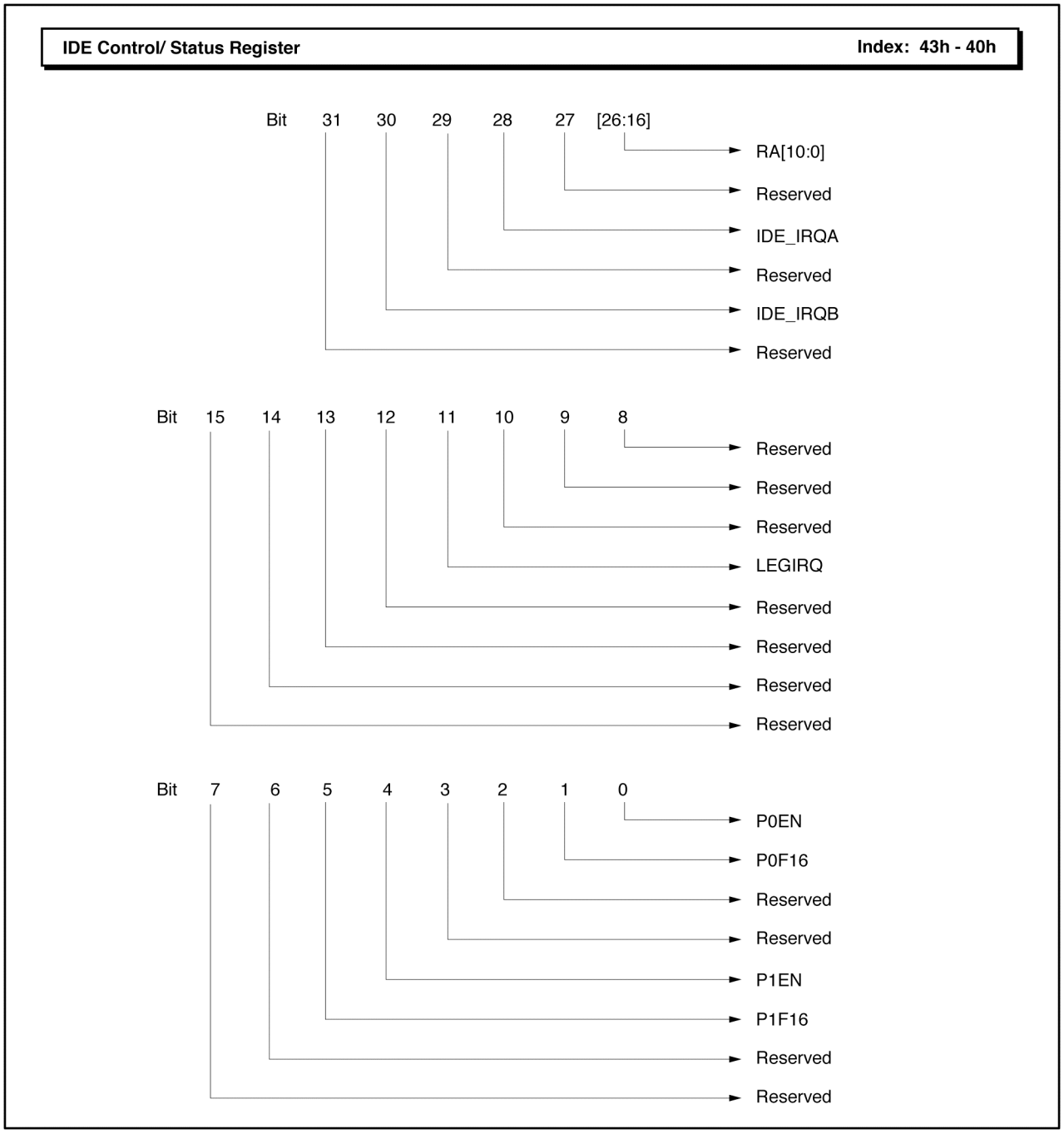

IDE Control/Status Register

Function: This register controls the two IDE ports of the W83C553F.

Type: Read/Write

Bit Description:

Bit 31: Reserved. This bit is hardwired to 0b.

Bit 30: IDE_IRQB. This is the IDE_IRQB input signal. It reflects the unbuffered state of the IDE_IRQB input.

Bit 29: Reserved. This bit is hardwired to 0b.

Bit 28: IDE_IRQA. This is the IDE_IRQA input signal. It reflects the unbuffered state of the IDE_IRQA input.

Bit 27: Reserved. This bit is hardwired to 0b.

Bits [26:16]: RA[10:0]. These bits control the read-ahead duration for the IDE interface. Read-ahead duration is defined as the number of 16-bit IDE data reads that will be prefetched independent of any PCI bus cycles. The actual read ahead count will equal the programmed value plus one cycle. The default value is 0FFh (255 decimal + 1) for 256 16-bit IDE cycles (512 bytes).

Bits [15:12]: Reserved. These bits are hardwired to 0000b.

Bit 11: LEGIRQ. This bit and bit 2 of the Programming Interface Register control the interrupt destination for both the IDE ports, in association with function 0 IDE_Interrupt_Routing_Control _Register (43H) . The default value of function 0, IDE Interrupt Routing Control Register is EFh, indicating primary port interrupt goes to IRQ 14, and secondary interrupt goes to IRQ15. When LEGIRQ=1, for using legacy interrupts, the function 0 IDE_Interrupt_Routing Control Register should be programmed to value 0, indicating legacy interrupt internal routing to INTC# and/or INTD# are desired, as shown below. The default state is 0b.

LEGIRQ	P1N/L#	IDEIRQA	IDEIRQB
0	x	IRQ14	IRQ15
1	0	INTC#	INTD#
1	1	INTC#	INTC#

Bit [10:8]: Reserved. These bits are hardwired to 0b.

Bit 7: Reserved.

Bit 6: Reserved. This bit is hardwired to 0b.

Bit 5: P1F16. Port 1 Fast 16 controls the operation of Port 1 (secondary port) when executing 16 bit PIO cycles on the PCI bus. When reset (0b), all 16 bit cycles to Port 1 will operate using the default 8-bit timing (Mode 0 compatible). Also, posted writes, read ahead and IDE_IOCHRDY will be disabled for 16-bit cycles. When set to 1b, 16-bit cycles will operate using the programmed speed setting, while posted writes, read ahead, and IDE_IOCHRDY will be supported as programmed in the applicable Port x Drive x Control Register. Bit 5 is cleared to a 0b after reset or if the secondary port receives a soft reset, defined as any time the secondary port device control register (default address 376h) is written with bit 2 a 1b.

Bit 4: P1EN. This is the secondary port enable bit. When set and IOEN is set in the Control Register, I/O cycles to the secondary port will be claimed and executed. When 0b or IOEN is 0b, all secondary port cycles will be ignored. The default value of this bit is "1."

Bit [3:2]: Reserved. These bits are hardwired to 0b.

Bit 1: P0F16. Port 0 Fast 16 functions the same as bit 5, but for Port 0 (Primary Port). Similarly, this bit is cleared any time the primary port device control register (default address 3F6h) is written with bit 2 a 1b.

Bit 0: P0EN. This is the primary port enable bit. When set and IOEN in the Control Register is enabled, I/O cycles to the primary port will be claimed and executed. When 0b or IOEN is 0b, all primary port cycles will be ignored. The default value of this bit is 1b.

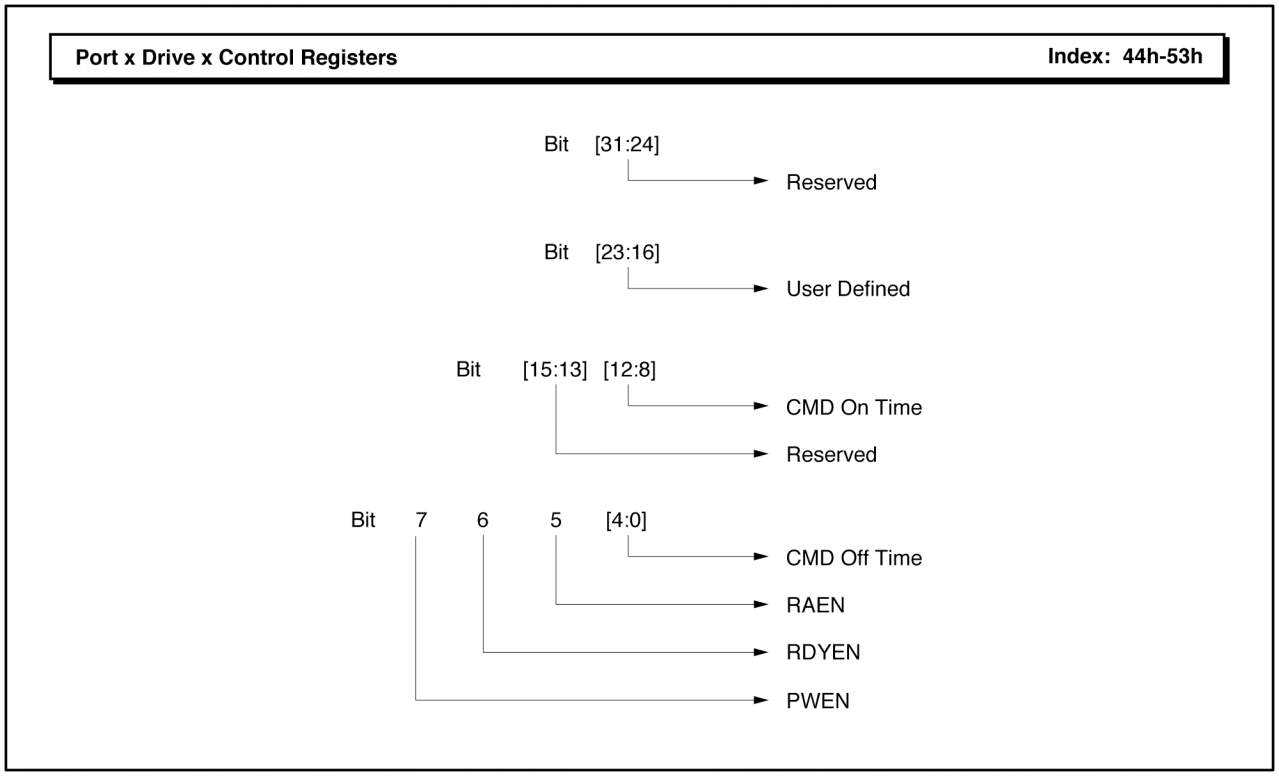

Port x Drive x Control Registers

Function: These registers control the features of the four devices connected to the two ports. All four registers are identical and control the features of only one device. The Port 0 Drive 0 Control Register (44h-47h) controls the features of the master drive attached to the primary port. The Port 0 Drive 1 Control Register (48h-4Bh) controls the features of the slave drive attached to the primary port. The Port 1 Drive 0 Control Register (4Ch-4Fh) controls the features of the master drive attached to the secondary port. The Port 1 Drive 1 Control Register (50h-53h) controls the features of the slave drive attached to the secondary port. The command timing controls only affect 16-bit and 32-bit accesses.

Calculations (refer to Table 4-4):

CMD ON TIME programmed value = (DIOR#/DIOW# 16-bit min+29) / 30ns clock - 1, after removing all digits to the right of the decimal point (see Table 4-4).

CMD OFF TIME programmed value = ((Cycle Time minimum – (CMD ON TIME programmed value + 1) * 30ns + 29)) / 30ns clock -1, after removing all digits to the right of the decimal point (see Table 4-4).

CMD ON TIME = Bits [12:8] of Port x Control x Registers , which are the registers of Configuration Space 44h-54h.

CMD OFF TIME = Bits [4:0] of Port x Control x Registers , which are the registers of Configuration Space 44h-54h.

Type: Read/Write

Bit Description:

Bits [31:24]:	Reserved. These bits are hardwired to a 0b.
Bits [23:16]:	User Defined. These bits are read/write and do not affect the operation of the W83C553F. They can be used by the driver as a temporary storage. These bits will be 0b after reset.
Bits [15:13]:	Reserved. These bits are hardwired to a 0b.
Bits [12:8]:	CMD ON TIME. The value programmed to these bits controls the IDE_IOR# and IDE_IOW# "ON" (low) time in clock cycles for this device. The actual number of clocks is the value programmed plus one clock. The default value is 9h or 10 clocks. This value affects both PIO and DMA timing.
Bit 7:	PWEN. Posted write enable must be set to execute posted writes for this device. When this bit is a 1b, posted writes are enabled. When this bit is a 0b, the default state, posted writes are disabled.
Bit 6:	RDYEN. When set, the IDE_IOCHRDY signal from the IDE interface is enabled and can insert wait states when this device is accessed. When 0, the IDE_IOCHRDY signal will have no effect on accesses to this device. This bit will be 0b after a reset.
Bit 5:	RAEN. Read-ahead enable must be enabled to execute read-ahead for this device. When this bit is a 1b, read-ahead is enabled. When this bit is a 0b, the default state, read-ahead is disabled.
Bits [4:0]:	CMD OFF TIME. The value programmed to these bits controls the IDE_IOR# and IDE_IOW# "OFF" (high) time in clock cycles for this device. The actual number of clocks is the value programmed plus one clock. The default value is 9h or 10 clocks. This value affects both PIO and DMA timing.

Table 4-4. Programming CMD ON and CMD OFF Times
(for 33 MHz PCI Bus Clock)

Drive Operation Mode	Cycle Time / DIOR#/DIOW# 16-bit (minimum)	CMD ON TIME Clocks (Programmed/Actual)	CMD OFF TIME Clocks (Programmed/Actual)
PIO Mode 0	600ns/165ns	5/6	13/14
PIO Mode 1	383ns/125ns	4/5	7/8
PIO Mode 2	240ns/100ns	3/4	4/5
PIO Mode 3	180ns/80ns	2/3	2/3
PIO Mode 4	120ns/70ns	2/3	0/1
PIO Mode 5 (proposed)	90ns/50ns	1/2	0/1
Single Word DMA Mode 0	960ns/480ns	15/16	15/16
Multiword DMA Mode 0	480ns/215ns	7/8	7/8
Multiword DMA Mode 1	150ns/80ns	2/3	1/2
Multiword DMA Mode 2	120ns/70ns	2/3	0/1
Multiword DMA Mode 3 (proposed)	90ns/50ns	1/2	0/1

4.4 Bus Master IDE (Function 1) I/O Registers

The Bus Master IDE Register set is defined by the PCI SIG. It is composed of 16 8-bit registers and is located at the I/O address specified by Base Address Register 4. The registers can be accessed 8, 16, 24, or 32 bits at a time.

This register set is supplied to offer a higher performance lower overhead IDE disk protocol. With this protocol, the host (PCI) transfers will be bus master cycles and the IDE device transfers will be DMA. The normal PIO protocol uses I/O transfers on both the host and IDE interfaces. Primary and Secondary refer to the primary and secondary IDE ports. Both register sets are identical.

Table 4-5. Bus Master IDE I/O Register Organization

Offset from Base Address	**Register Bits**			
	31 24	**23 16**	**15 8**	**7 0**
03h - 00h	Reserved	Primary Status Register	Reserved	Primary Command Register
07h - 04h	Primary PRD Table Address			
0Bh - 08h	Reserved	Secondary Status Register	Reserved	Secondary Command Register
0Fh - 0Ch	Secondary PRD Table Address			

Note: The registers shown in Table 4-5 *cannot be accessed* until after Base Address Register 4 is written (with any non zero value).

4.4.1 Primary/Secondary Command Registers

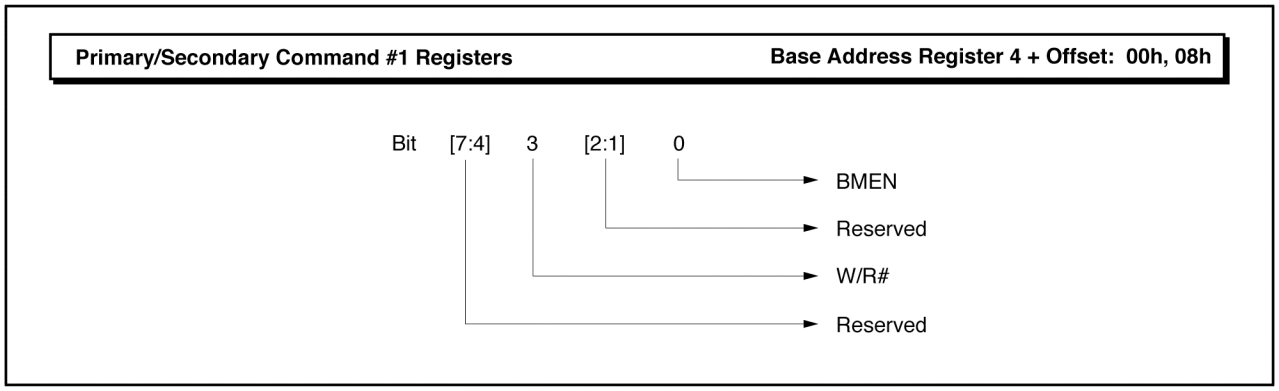

Primary/Secondary Command #1 Registers

Function: These registers are used to control DMA data transfers to/from the two IDE ports when multi-word DMA disk drives are used.

Type: Read/Write

Bit Description:

Bits [7:4]: These bits are hardwired to 0b.

Bit 3: W/R#. This bit controls the bus master transfer direction. Low is PCI memory to IDE device and high is IDE device to PCI memory. This bit must not be changed while the bus master function is active as defined by bit 0.

Bits [2:1]: These bits are hardwired to 0b.

Bit 0: BMEN. Bus Master operation is active when this bit is set. The bus master operation can be terminated by writing a 0b to this bit but is considered as an abort and can not be resumed. Writing a 1b to this bit will also set the BMEN bit in the Device Control Register.

4.4.2 Primary/Secondary Status Registers

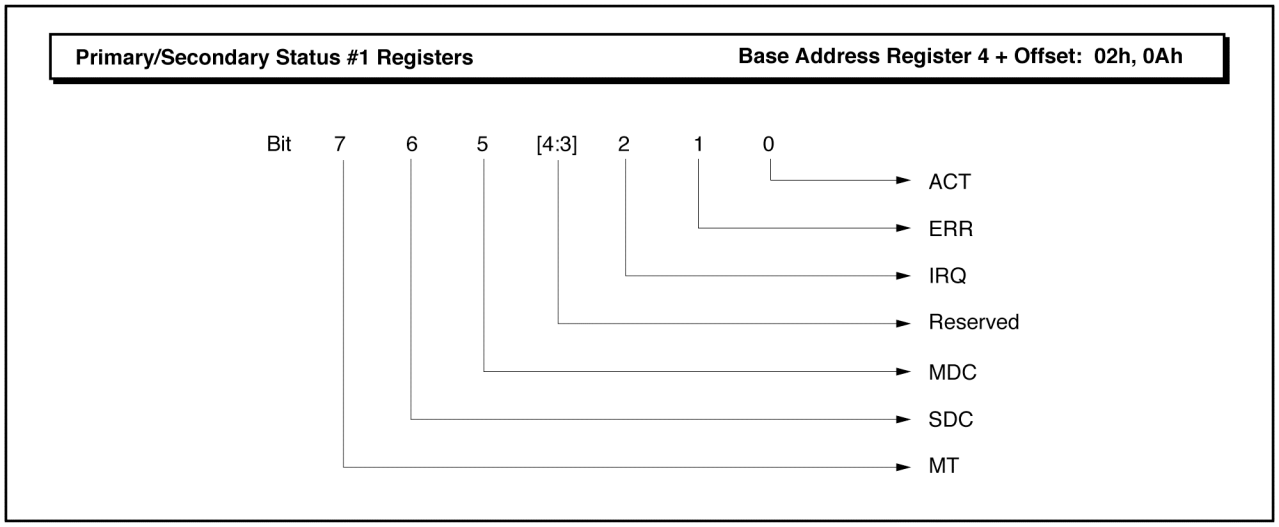

Primary/Secondary Status #1 Registers (default = 00h)

Function: These register descriptions are the same and are used to control the two IDE ports under the protocol, which requires a multi-word DMA-capable disk drive in order for the W83C553F to function as a PCI master.

Type: Read/Write

Bit Description:

Bit 7: MT. The multithread bit is hardwired to a 0b to indicate that both channels operate independently and can be used at the same time.

Bit 6: SDC. Slave drive DMA capable is a status bit that is set by a driver/program to indicate that the slave drive on the indicated port is DMA capable and that the W83C553F. is initialized for optimal performance. This bit is a 0b after a reset.

Bit 5: MDC. Master drive DMA capable is a status bit that is set by a driver/application to indicate that the master drive on the indicated port is DMA capable and that the W83C553F. is initialized for optimal performance. This bit is a 0b after a reset.

Bit [4:3]: These bits are hardwired to a 0b.

Bit 2: IRQ. This bit is set by the rising edge of the associated ports IDE_IRQ signal. This bit is cleared by writing a 1b to it. On data transfers from an IDE device to system memory, this bit will be delayed until all data has been transferred to memory. This bit is a 0b after a reset. A noise filter has been added to the IDE_IRQ inputs.

Bit 1: ERR. This bit is set when the controller encounters an error when transferring data to/from system memory. The specific error conditions are errors that would cause bit 8, 12, or 13 of the Device Status register to become set. This bit is reset by writing a 1b to it. This bit is a 0b after a reset.

Bit 0: ACT. This bit is set when the start bit of the command register is written with a 1b. It is cleared when the start bit is written with a 0b (abort condition) or when the last transfer for a region is performed where EOT is set in that region descriptor (normal termination).

4.4.3 Primary/Secondary PRD Table
(Base Address Register 4 value + offset: 07h-04h, 0Fh-0Ch)

These registers contain the starting address of the first Physical Region Descriptor Table in memory which applies to cases where the W83C553F is functioning as a PCI bus master with one or more multi-word DMA mode disk drives. Bits 31 through 2 define a double word aligned address in memory. Bits 1 and 0 are reserved and will be ignored on writes and read as 00b. The information in the descriptor table controls where the data is transferred to/from in system memory, how much data is transferred and when the transfer is complete.

The descriptor table is composed of one or more Physical Region Descriptors. Each entry is two double words (8 bytes) and is defined below.

Table 4-6. Physical Region Descriptor

Dword	**Data Bits**		
	31 16	**15 0**	
0	Memory Region Physical Base Address (31:2)		00
1	EOT Reserved	Byte Count	

The Memory Region Physical Base Address specifies a word aligned address in memory that the bus master will transfer data to/from.

The byte count specifies the number of bytes of data to transfer to this region of memory. The byte count is required to be even (D0=0b). The maximum number of bytes defined in one descriptor entry is 64K which is selected by a value of 00h. The number of bytes specified must not cause the memory region specified to cross a 64K boundary.

Bit 31 of double word 1 is the End Of Table flag. Bus master operation terminates upon completion of the descriptor entry that has EOT set.

The Physical Region Descriptor Table cannot cross a 64K memory boundary.

5.0 ELECTRICAL SPECIFICATIONS

This section contains all electrical specifications for Winbond Systems Laboratory W83C553F SIO chip. The W83C553F must meet all absolute maximum ratings to avoid being damaged; and all combinations of the AC, DC and recommended operating specifications.

Table 5.1. Absolute Maximum Ratings

Parameter	Values Min	Max	Notes
Storage Temperature	-40°C	125°C	
Supply Voltage (Vdd)	-0.5V	7.0V	
Input Voltage	-0.5V	Vdd +0.5V	
Output Voltage	-0.5V	Vdd +0.5V	

Table 5-2. Recommended Operating Ranges

Parameter	Values Min	Max	Notes
V_{DD} DC Supply Voltage	4.75V	5.25V	
V_{IN} Input Voltage	V_{SS}	V_{DD}	
Operating Temperature	0	+70°C	

Table 5.3. DC Characteristics (Ta=0°C to 70°C, Vdd=5V+/-5%)

Parameter	Values Min	Max	Notes
Input low level	-	0.8V	TTL. 0.5V typical
Input high level		5.5V	TTL. 2.0V typical
Output low voltage:			
4mA buffer, IOL=4mA		0.4V	0.15V typical
8mA buffer, IOL=8mA		0.4V	0.18V typical
12mA buffer, IOL=12mA		0.4V	0.18V typical
16mA buffer, IOL=16mA		0.4V	0.17V typical
Output high voltage:			
4mA buffer, IOL=4mA	3.0V	-	4.54V typical
8mA buffer, IOL=8mA	3.0V	-	4.44V typical
12mA buffer, IOL=12mA	3.0V	-	4.46V typical
16mA buffer, IOL=16mA	3.0V	-	4.46V typical
Input low current	-10uA	-	-0.01uA typical
with 50K pullup resistor	-250uA	-20uA	-80uA typical
Input high current	-	10uA	0.01uA typical
Tristate output off current low	-10uA	-	-0.01uA typical
Tristate output off current high	-	10uA	0.01uA typical
Input capacitance**	-	-	10pF typical
Output capacitance**	-	-	10pF typical
I/O capacitance**	-	-	10pF typical

* Typical is under the condition of Vdd=5.0+/-5% and Ta=25 degree C.
** Capacitance includes the capacitance of I/O cell plus package pin.

6.0 TIMING DIAGRAMS

This chapter lists the following PCI, ATA, and ISA timing information:

- PCI Clock Timing
- PCI Bus Timing
- IDE Interface Timing
- IDE Data Transfer Timing
- Miscellaneous Timing
- Example PIO ATA Data Transfer Timing
- Example Single Word DMA ATA Data Transfer Timing
- Example Multiword DMA ATA Data Transfer Timing
- ISA Bus Timing

6.1 PCI Timing Diagrams

This section provides timing information on PCI cycles supported by the W83C553F.

Table 6-1. PCI Clock Timing

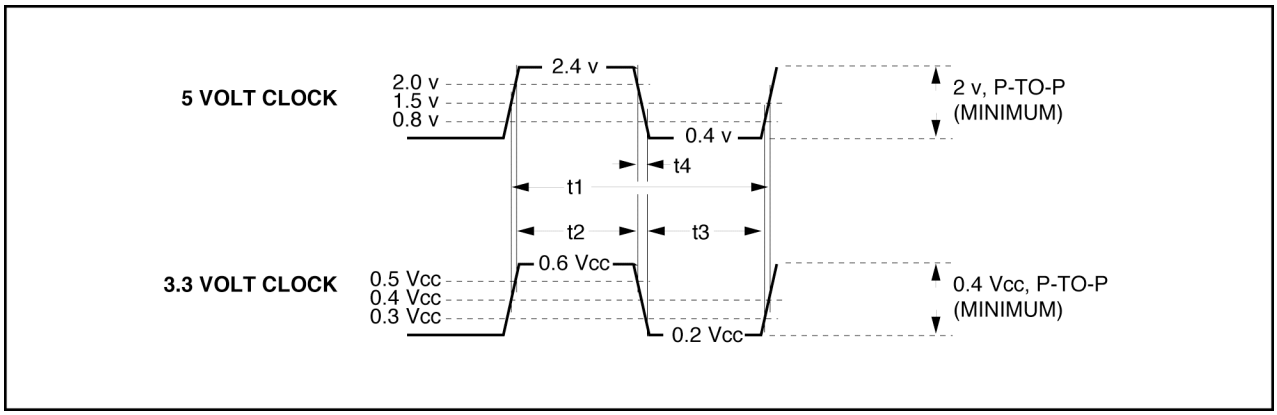

Note: For 5V PCI Bus, measurements were taken from 0.4V to 2.4V.
All V_{DD} are 4.75V to 5.25V

Parameter		Values Min	Max	Notes
t1	CLK cycle time	30ns		The W83C553F will operate properly at any frequency between 0 and 33 MHz.
t2	CLK high time	11ns	-	
t3	CLK low time	11ns	-	
t4	CLK slew rate	1V/ns	4V/ns	

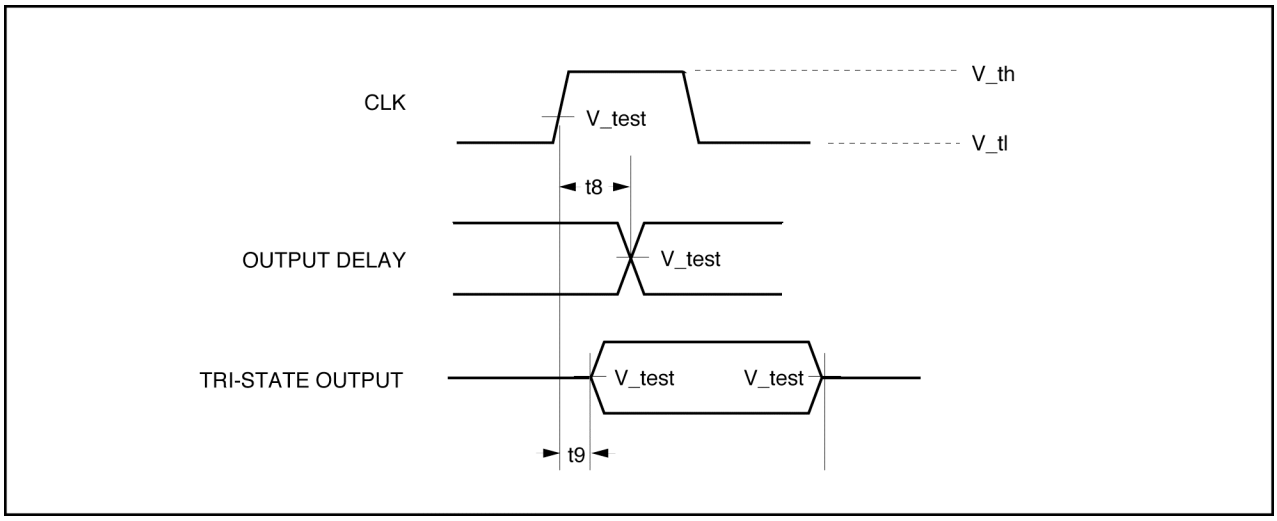

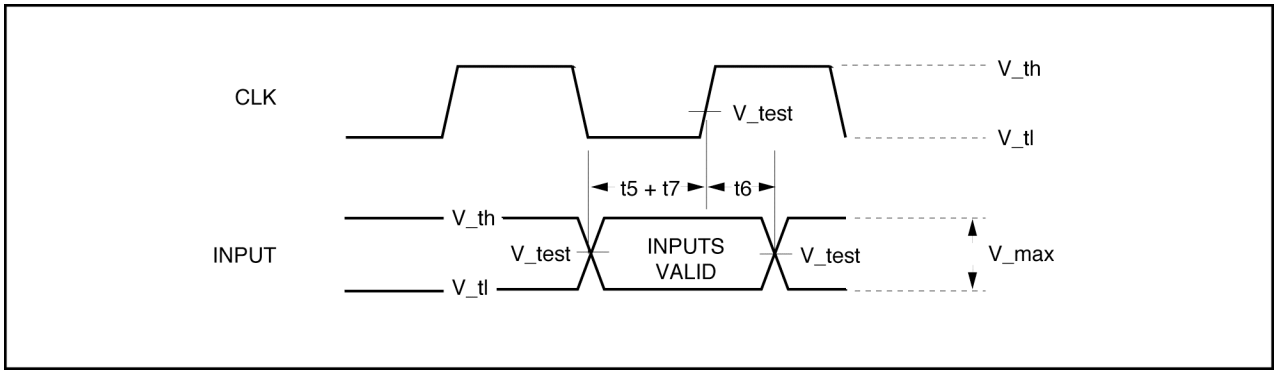

Table 6-2. PCI Bus Timing

Note: For 5V PCI Bus, measurements were taken from 0.4V to 2.4V.
All V_{DD} are 4.75V to 5.25V

Parameter	Values Min	Values Max	Notes
t5 Setup to CLK rising	7ns	-	All PCI bussed signals, except REQ# and GNT#.
t6 Hold from CLK rising	0ns	-	All PCI bussed signals.

Table 6-2 (continued). PCI Bus Timing

Parameter		Values Min	Values Max	Notes
t7	Setup to CLK rising	10ns	-	Timing for GNT#.
		12ns	-	Timing for REQ#.
t8	Valid from CLK rising	2ns	11ns	All PCI bussed signals, except REQ# and GNT#.
		2ns	12ns	Timing for REQ# and GNT#.
t9	Float from CLK rising	-	28ns	All PCI bussed signals, except REQ# and GNT#.

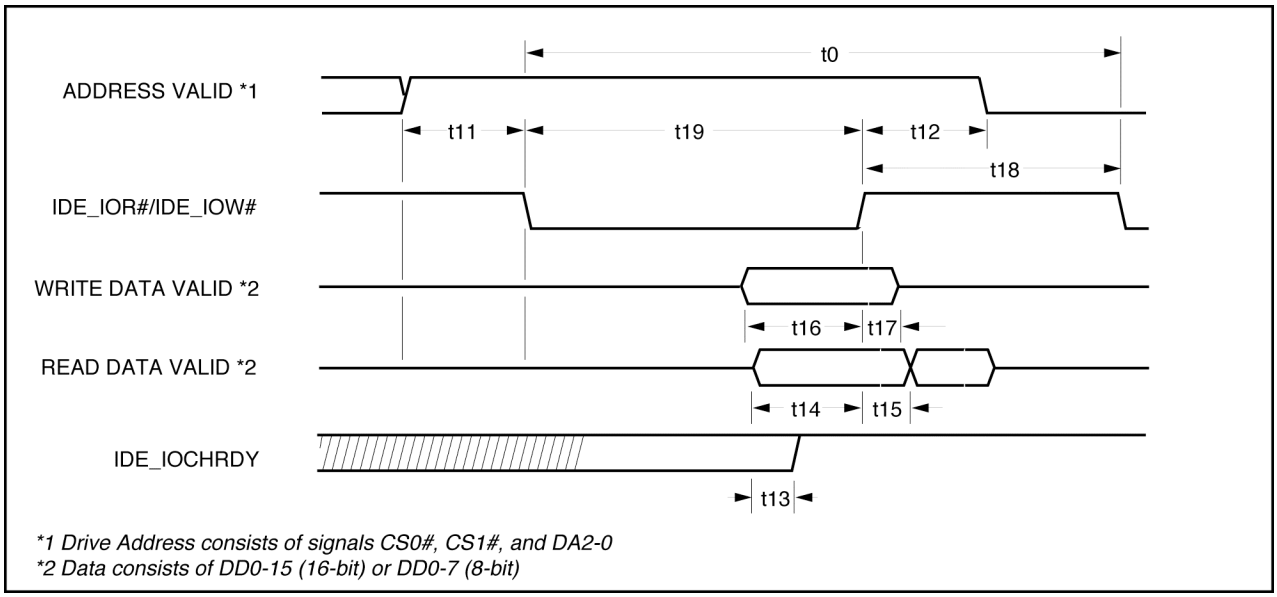

Table 6-3. IDE Interface Timing

Parameter	Values Min	Max	Notes
t11 Address Setup to command low	3 x t1 ns	-	
t12 Address hold from command high	30ns		
t13 IDE_IOCHRDY high setup to command high	0.5 x t1 ns		
t14 Read data setup to IDE_IOR# high	10ns		
t15 Read data hold from IDE_IOR# high	0ns		
t16 Write data setup to IDE_IOW# high	t19ns		
t17 Write data hold from IDE_IOW# high	30ns		
t18 Command recovery time 8-bit cycle	300ns		
t18 Command recovery time 16-bit cycle	r2 x t1ns		r2 is the 16-bit command recovery count in PCI clocks (page 126)
t19 Command active time 8-bit cycle	300ns		
t19 Command active time 16-bit cycle	a2 x t1ns		a2 is the 16-bit command active count in PCI clocks (page 126)

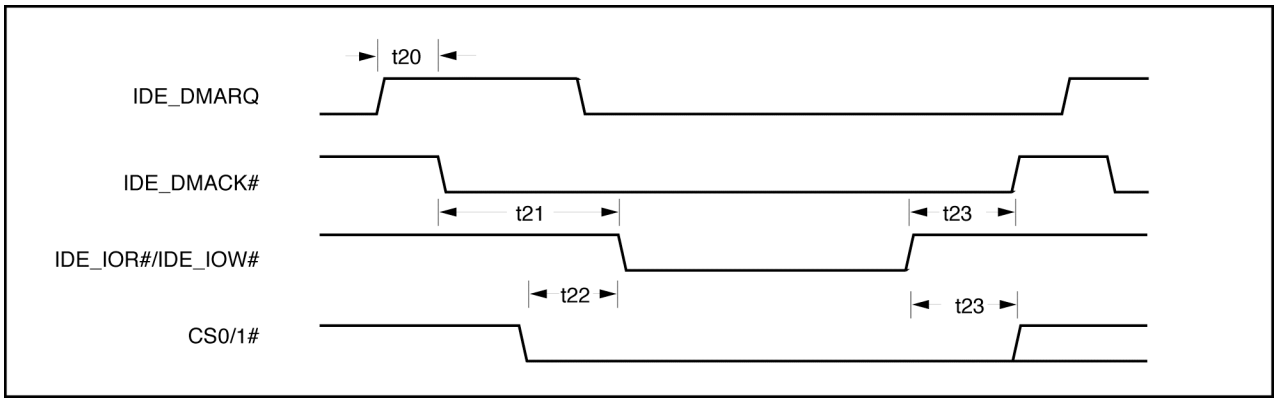

Table 6-4. IDE Data Transfer Timing

Parameter	Values Min	Values Max	Notes
t20 IDEDRQ[A:B] high to IDEDAK[A:B]# low delay	0ns	-	
t21 IDEDAK[A:B]# setup to command low	0ns	-	
t22 CS0#, CS1# setup to command low	3 x t1ns		
t23 IDEDAK[A:B]#, CS0#, CS1# hold from command high	t1ns		

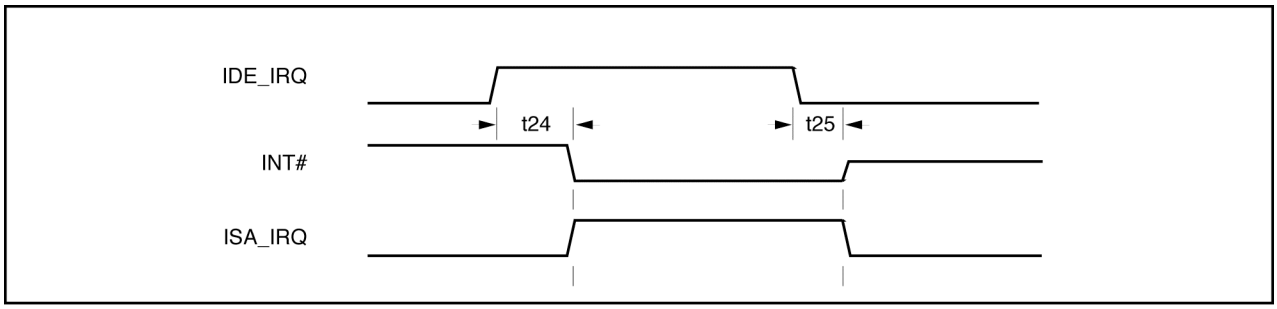

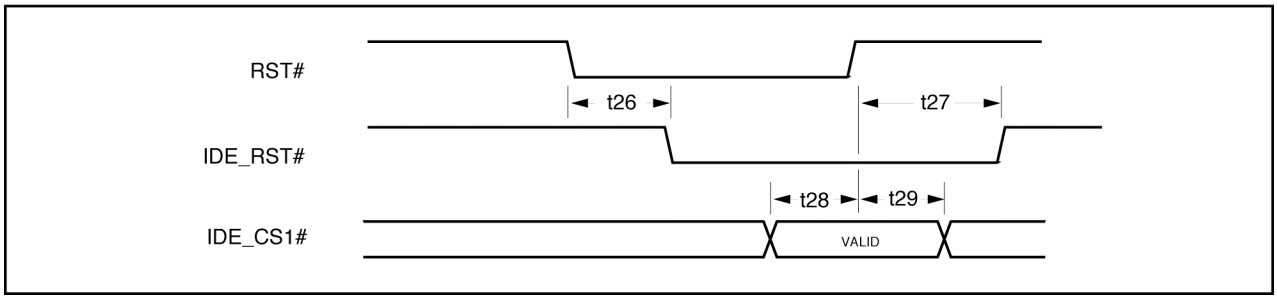

Table 6-5. Miscellaneous Timing

Parameter		Values Min	Values Max	Notes
t24	IDEIRQ[A:B] high to INT# low or ISA IRQ high	-	50ns	Assumes that the interrupt path is enabled. It could be disabled or temporarily delayed due to read data in a FIFO.
t25	IDEIRQ[A:B] low to INT# float or ISA IRQ low	-	50ns	
t26	RST# low to IDE_RST# low	30ns	50ns	
t27	RST# high to IDE_RST# high	-	50ns	
t28	IDECS1# setup to RST# high	20ns	-	
t29	IDECS1# hold from RST# high.	0ns	-	

6.2 IDE/ATA Data Transfers

This information has been transferred from the ATA-2 x3T9.2 specification for PIO modes 0-3, Multiword DMA modes 0-1 and Single-word DMA modes 0-2. SFF 8033 Rev. 0.2 defines PIO mode 4 and Multiword DMA mode 2.

6.2.1 Example PIO ATA Data Transfer Timing

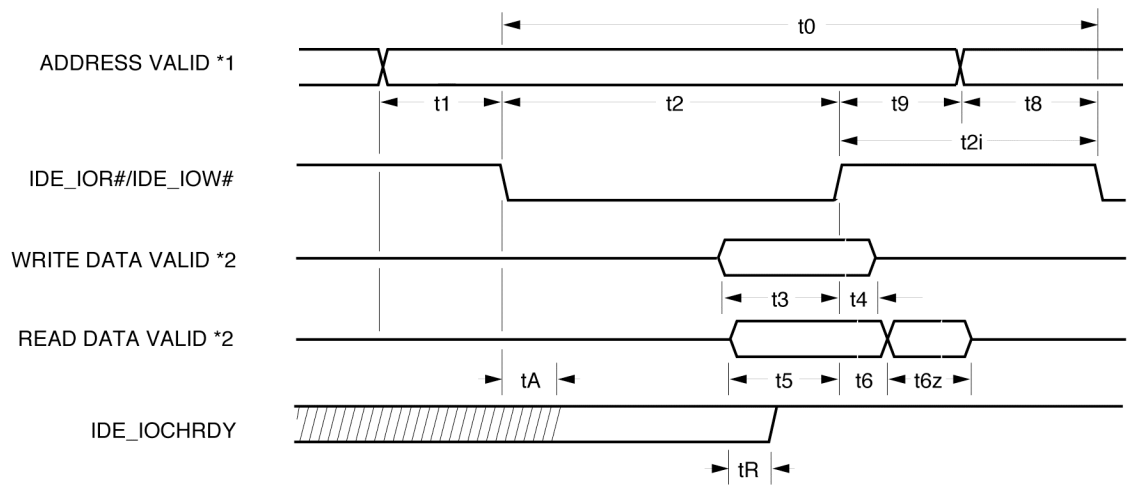

**1 Drive Address consists of signals CS0#, CS1#, and DA2-0*
**2 Data consists of DD0-15 (16-bit) or DD0-7 (8-bit)*

Table 6-6. PIO ATA Data Transfer Timing

Parameter			Values Min	Values Max	Notes
t0	Cycle Time	Mode 0	600ns		
		Mode 1	383ns		
		Mode 2	240ns		
		Mode 3	180ns		
		Mode 4	120ns		
t1	Address valid to IDEIOR[A:B]# / IDEIOW[A:B]# setup	Mode 0	70ns		
		Mode 1	50ns		
		Mode 2	30ns		
		Mode 3	30ns		
		Mode 4	25ns		

Table 6-6 (continued). PIO ATA Data Transfer Timing

Parameter			Values Min	Values Max	Notes
t2	IDEIOR[A:B]# / IDEIOW[A:B]# 16-bit	Mode 0	165ns		t0 is the minimum total cycle time, t2 is the minimum command active time, and t2i is the minimum command recovery time or command inactive time. The actual cycle time equals the sum of the actual command
		Mode 1	125ns		
		Mode 2	100ns		
		Mode 3	80ns		
		Mode 4	70ns		
		Mode 5			
t2	Pulse Width 8-bit	Mode 0	290ns		active time and the actual command inactive time. The three timing requirements of t0, t2, t2i shall be met. The minimum total cycle time requirement, t0, is greater than the sum of t2 and t2i. This means host implementation
		Mode 1	290ns		
		Mode 2	290ns		
		Mode 3	80ns		
		Mode 4	70ns		
		Mode 5			
t2i	IDEIOR[A:B]# / IDEIOW[A:B]# recovery time	Mode 0	-		can lengthen either or both t2 and t2i. to ensure that t0 is equal to the value reported in the devices identify drive data. A device implementation shall support any legal host implementation.
		Mode 1	-		
		Mode 2	-		
		Mode 3	70ns		
		Mode 4	25ns		
		Mode 5			
t3	IDEIOW[A:B]# data setup	Mode 0	60ns		
		Mode 1	45ns		
		Mode 2	30ns		
		Mode 3	30ns		
		Mode 4	20ns		
		Mode 5			
t4	IDEIOW[A:B]# data hold	Mode 0	30ns		
		Mode 1	20ns		
		Mode 2	15ns		
		Mode 3	10ns		
		Mode 4	10ns		
		Mode 5			

Table 6-6 (continued). PIO ATA Data Transfer Timing

Parameter			Values Min	Values Max	Notes
t5	IDEIOR[A:B]# data setup	Mode 0	50ns		
		Mode 1	35ns		
		Mode 2	20ns		
		Mode 3	20ns		
		Mode 4	20ns		
		Mode 5			
t6	IDEIOR[A:B]# data hold	Mode 0	5ns		
		Mode 1	5ns		
		Mode 2	5ns		
		Mode 3	5ns		
		Mode 4	5ns		
		Mode 5			
t6z	IDEIOR[A:B]# data tri-state	Mode 0		-	This parameter specifies the time from the negation edge of IDEIOR[A:B]# to the time that the data bus is no longer driven by the device (tri-state).
		Mode 1		-	
		Mode 2		-	
		Mode 3		30ns	
		Mode 4		30ns	
		Mode 5			
t9	IDEIOR[A:B]# / IDEIOW[A:B]# to address valid hold	Mode 0	20ns		
		Mode 1	15ns		
		Mode 2	10ns		
		Mode 3	10ns		
		Mode 4	5ns		
		Mode 5			
tR	Read data valid to IDECHRDY active	Mode 0	-		If IDE_IOCHRDY is initially asserted after tA.
		Mode 1	-		
		Mode 2	-		
		Mode 3	0ns		
		Mode 4	0ns		
		Mode 5			

6.2.2 Example Single Word DMA ATA Data Transfer Timing

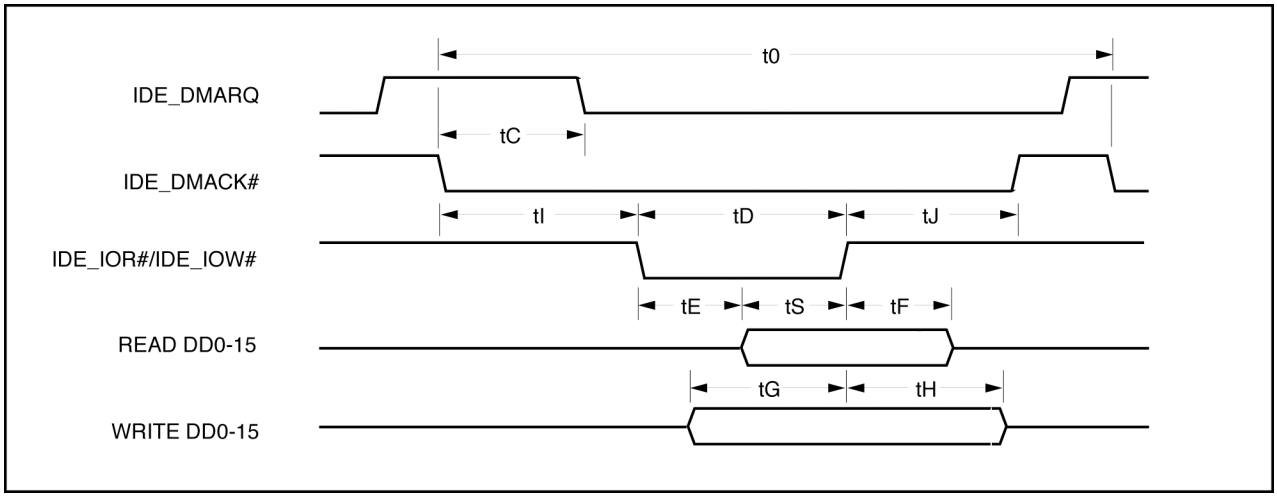

Table 6-7. Single Word DMA ATA Data Transfer Timing

Parameter			Values Min	Values Max	Notes
t0	Cycle Time	Mode 0	960ns		
		Mode 1	480ns		
		Mode 2	240ns		
		Mode 3			
tC	IDEDAK[A:B]# to IDEDRQ[A:B] delay	Mode 0		200ns	
		Mode 1		100ns	
		Mode 2		80ns	
		Mode 3			
tD	IDEIOR[A:B]# / IDEIOW[A:B]# 16-bit minimum command active time	Mode 0	480ns		
		Mode 1	240ns		
		Mode 2	120ns		
		Mode 3			
tE	IDEIOR[A:B]# data access	Mode 0		250ns	
		Mode 1		150ns	
		Mode 2		60ns	
		Mode 3			

Table 6-7 (continued). Single Word DMA ATA Data Transfer Timing

Parameter			Values Min	Values Max	Notes
tF	IDEIOR[A:B]# read data hold	Mode 0	5ns		
		Mode 1	5ns		
		Mode 2	5ns		
		Mode 3			
tG	IDEIOW[A:B]# write data setup	Mode 0	250ns		
		Mode 1	100ns		
		Mode 2	35ns		
		Mode 3			
tH	IDEIOW[A:B]# write data hold	Mode 0	50ns		
		Mode 1	30ns		
		Mode 2	20ns		
		Mode 3			
tI	IDEDAK[A:B]# to IDEIOR[A:B]# / IDEIOW[A:B]# setup	Mode 0	0ns		
		Mode 1	0ns		
		Mode 2	0ns		
		Mode 3			
tJ	IDEIOR[A:B]# / IDEIOW[A:B]# to IDEDAK[A:B]# hold	Mode 0	0ns		
		Mode 1	0ns		
		Mode 2	0ns		
		Mode 3			
tS	IDEIOR[A:B]# read setup	Mode 0	tD-tEns	-	
		Mode 1	tD-tEns	-	
		Mode 2	tD-tEns	-	
		Mode 3			

6.2.3 Example Multiword DMA ATA Data Transfer Timing

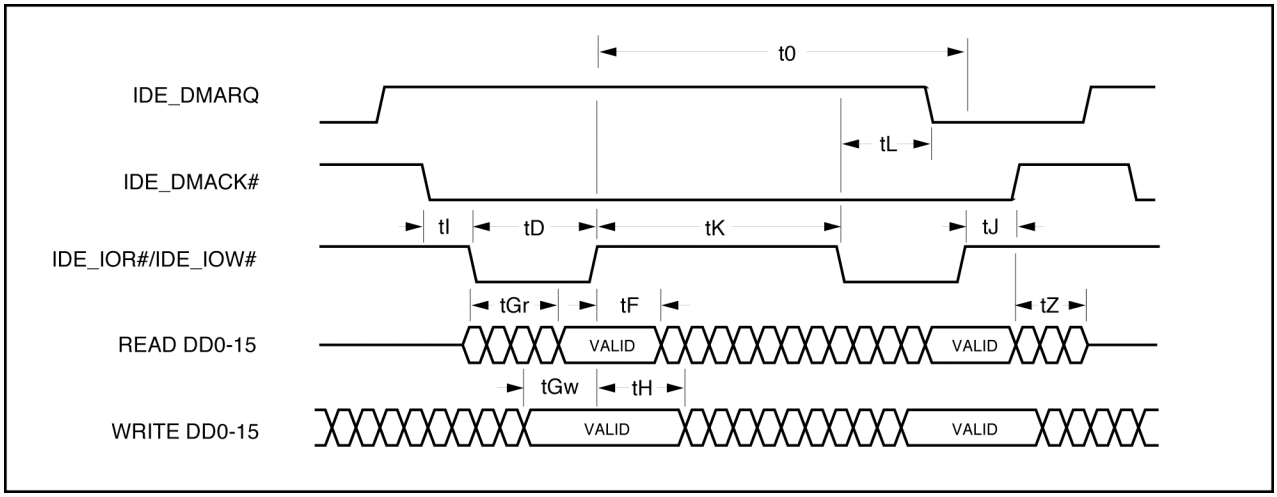

Table 6-8. Multiword DMA ATA Data Transfer Timing

Parameter			Values Min	Values Max	Notes
t0	Cycle Time	Mode 0	480ns		
		Mode 1	150ns		
		Mode 2	120ns		
		Mode 3			
tC	IDEDAK[A:B]# to IDEDRQ[A:B] delay	Mode 0		-	
		Mode 1		-	
		Mode 2		-	
		Mode 3			
tD	IDEIOR[A:B]# / IDEIOW[A:B]# 16-bit minimum command active time	Mode 0	215ns		
		Mode 1	80ns		
		Mode 2	70ns		
		Mode 3			

Table 6-8 (continued). Multiword DMA ATA Data Transfer Timing

Parameter			Values Min	Values Max	Notes
tE	IDEIOR[A:B]# data access	Mode 0		150ns	
		Mode 1		60ns	
		Mode 2		-	
		Mode 3			
tF	IDEIOR[A:B]# read data hold	Mode 0	5ns		* The meaning of this parameter in ATA is not clear. The parameter is not applicable to this specification.
		Mode 1	5ns		
		Mode 2	5ns	*	
		Mode 3			
tZ	IDEDAK[A:B]# to tri-state	Mode 0	20ns		This parameter specifies the time from the negation edge of DIOR# to the time that the data bus is no longer driven by the device (tristate).
		Mode 1	25ns		
		Mode 2	25ns		
		Mode 3			
tG	IDEIOR[A:B]# / IDEIOW[A:B]# data setup	Mode 0	100ns		
		Mode 1	30ns		
		Mode 2	20ns		
		Mode 3			
tH	IDEIOR[A:B]# / IDEIOW[A:B]# write data hold	Mode 0	20ns		
		Mode 1	15ns		
		Mode 2	10ns		
		Mode 3			

Table 6-8 (continued). Multiword DMA ATA Data Transfer Timing

Parameter			Values Min	Values Max	Notes
tI	IDEDAK[A:B]# to IDEIOR[A:B]# / IDEIOW[A:B]# setup	Mode 0 Mode 1 Mode 2 Mode 3	0ns 0ns 0ns		
tJ	IDEIOR[A:B]# / IDEIOW[A:B]# to IDEDAK[A:B]# hold	Mode 0 Mode 1 Mode 2 Mode 3	20ns 5ns 5ns		
tKr	IDEIOR[A:B]# negated pulse width	Mode 0 Mode 1 Mode 2 Mode 3	50ns 50ns 25ns		The delay from DIOR# or DIOW# until the state of IORDY is first sampled. If IORDY is inactive, then the host shall wait until IORDY is active before the PIO cycle can be completed. If the device is not driving IORDY negated at the time tA after the activation of DIOR# or DIOW#, then t5 shall be met and tRD is not applicable. If the device is driving IORDY negated at the time tA after the activation of DIOR# or DIOW#, then tRD shall be met and t5 is not applicable.
tKw	IDEIOW[A:B]# negated pulse width	Mode 0 Mode 1 Mode 2 Mode 3	215ns 50ns 25ns		
tLr	IDEIOR[A:B]# to IDEDRQ[A:B] delay	Mode 0 Mode 1 Mode 2 Mode 3		120ns 40ns 35ns	
tLw	IDEIOW[A:B]# to IDEDRQ[A:B] delay	Mode 0 Mode 1 Mode 2 Mode 3		40ns 40ns 35ns	

6.3 ISA Bus Timing

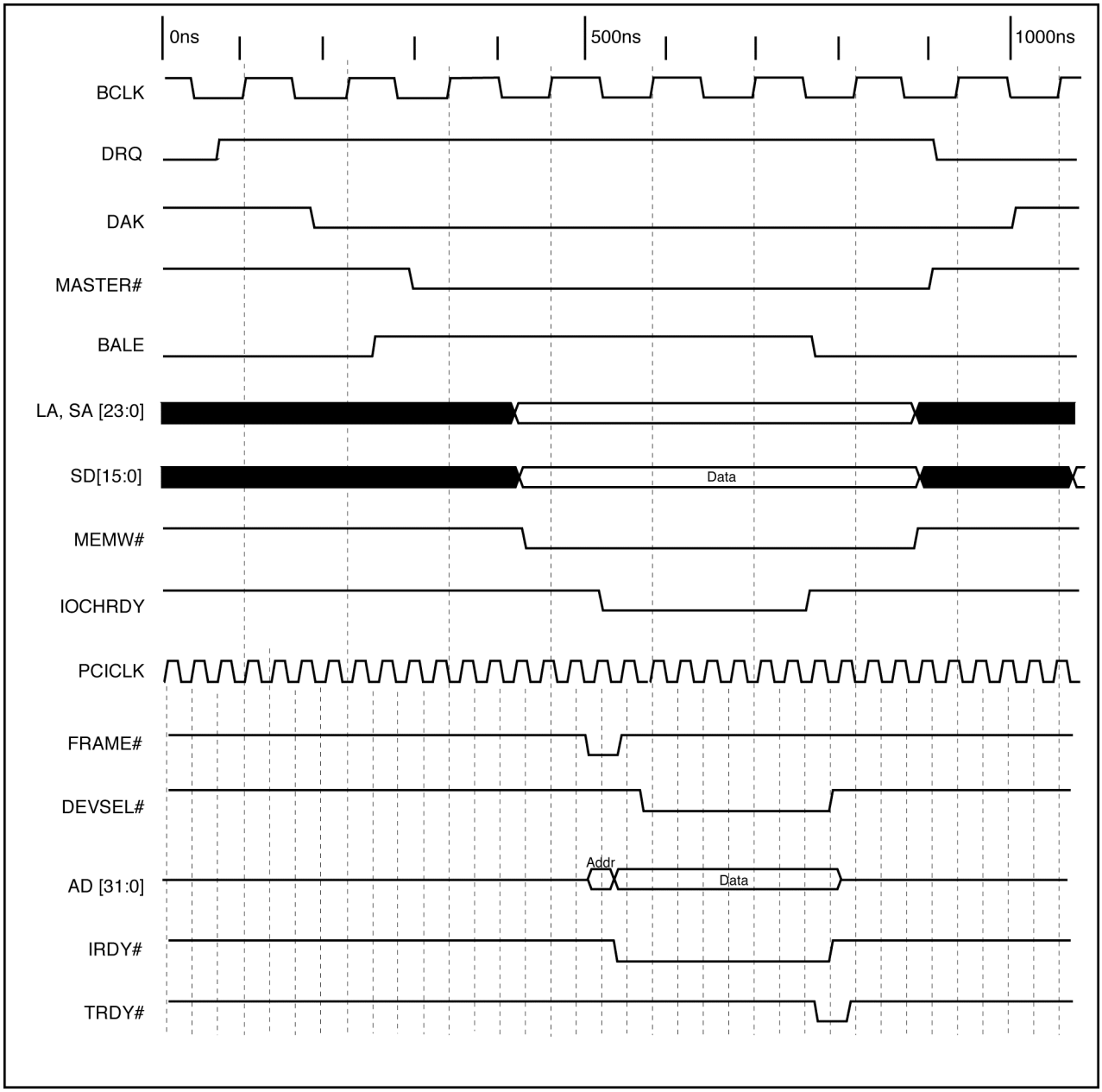

Table 6-9. ISA Master Write to PCI

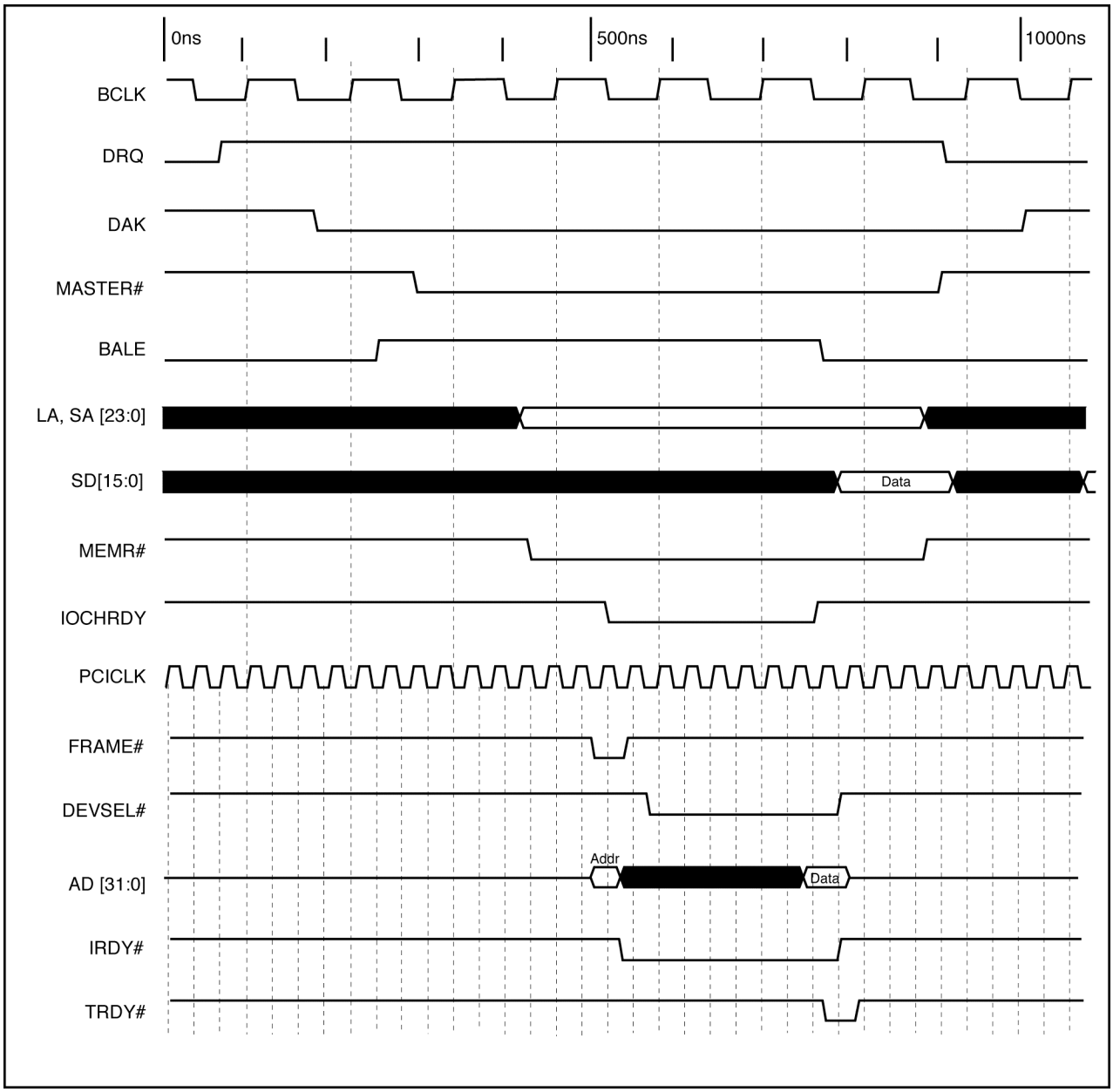

Table 6-10. ISA Master Read from PCI

7.0 MECHANICAL DESCRIPTION

This chapter shows the dimensions of the W83C553F Enhanced SIO with PCI Arbiter chip.

208L QFP (28X28 mm footprint 2.6mm)

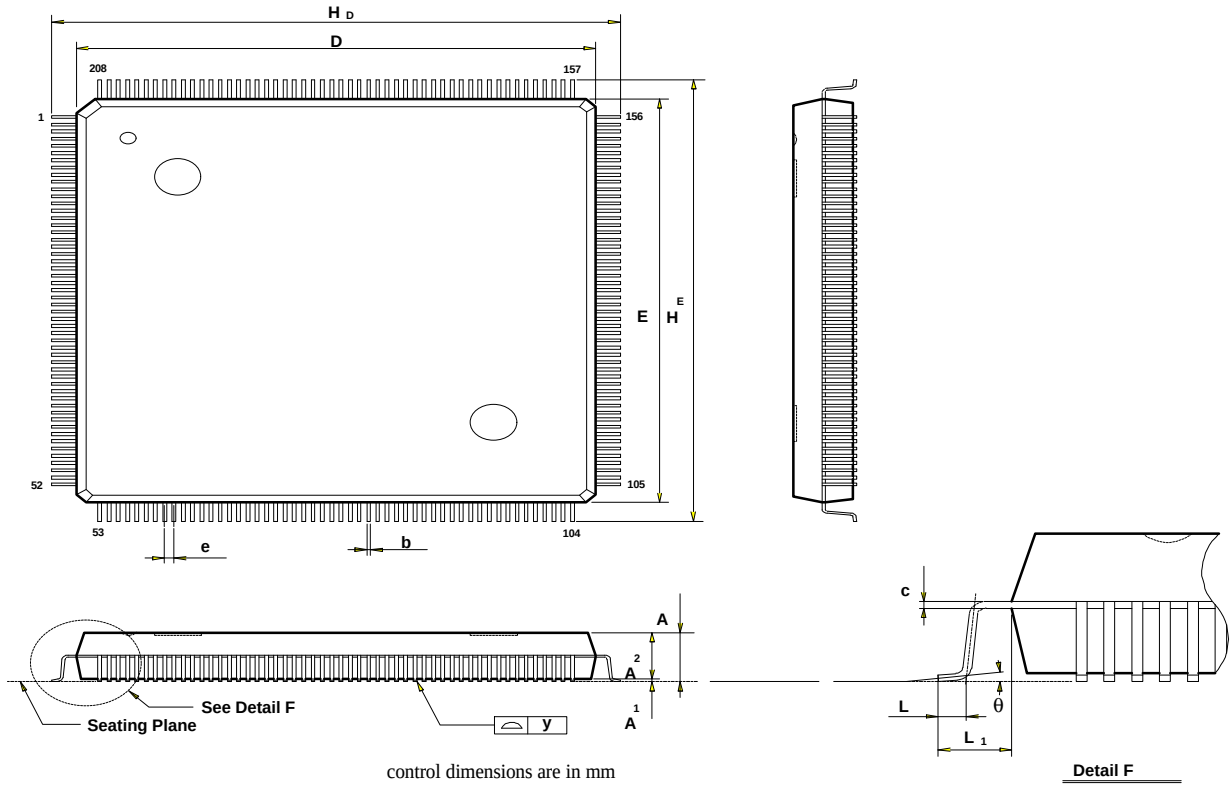

control dimensions are in mm

Symbol	Dimension in inch			Dimension in mm		
	Min	Nom	Max	Min	Nom	Max
A	—	—	0.145	—	—	3.68
A_1	0.004	—	—	0.10	—	—
A_2	0.122	0.127	0.132	3.10	3.23	3.35
b	0.006	0.008	0.010	0.15	0.20	0.25
c	0.004	0.006	0.010	0.10	0.15	0.25
D	1.097	1.102	1.107	27.87	28.00	28.13
E	1.097	1.102	1.107	27.87	28.00	28.13
e	0.016	0.020	0.024	0.40	0.50	0.60
H_D	1.193	1.205	1.217	30.30	30.60	30.90
H_E	1.193	1.205	1.217	30.30	30.60	30.90
L	0.012	0.020	0.028	0.30	0.50	0.70
L_1	0.043	0.051	0.059	1.10	1.30	1.50
y	—	—	0.004	—	—	0.10
θ	0°	—	10°	0°	—	10°

8.0 Thermal Information

Theta JA = Thermal Resistance between Junction and Ambient for the 208PQFP.

Theta JA = 43.13 ^{0}C/W (air velocity = 0 M/s)
35.25 ^{0}C/W(air velocity = 1 M/s)
30.90 ^{0}C/W (air velocity = 2M/s)

Theta JA = $(T_{junction} - T_{ambient}) / P_{chip}$;

Where P_{chip} = Power dissipation on the chip (in watts)

Driving capacity of output and input/output pins of 553F (Revision G)

Pin Name	Pin #	I/O	Output Cur.	Note
A20M#/PCIRST#	22	Output	PCI Std.	Note 1
AD[31:0]	29-31, 33-37, 41-44, 46, 47, 49, 50, 62-67, 69, 71, 73-79, 81	Input/Output		
C/BE[3:0]#	39, 51, 61, 72	Input/Output	PCI Std.	
PAR	60	Input/Output	PCI Std.	
FRAME#	53	Input/Output	PCI Std.	
PERR#	58	Input/Output	PCI Std.	
IRDY#	54	Input/Output	PCI Std.	
TRDY#	55	Input/Output	PCI Std.	
DEVSEL#	56	Input/Output	PCI Std.	
STOP#	57	Input/Output	PCI Std.	
SERR#	59	Input/OD	PCI Std.	
INT[C:D]#	19, 18	Input/OD	PCI Std.	
GNT0#/PIBREQ#	26	Output	8 mA	Note 3
GNT1#/IDEREQ#	28	Output	8 mA	
ARBDIS#/GNT2#	16	Input/Output	8 mA	
PCI5TH#/GNT3#	13	Input/Output	8 mA	
GNT4#/FLSHREQ#	6	Output	8 mA	
PWRPC/X86#/CPUGNT#	8	Input/Output	6 mA	
IDECS0#	87	Output	24 mA	
IDECS1#/NAT/LEG#	86	Input/Output	24 mA	
IDEIOWA#	85	Output	24 mA	
IDEIORA#	83	Output	24 mA	
IDEIOWB#	84	Output	24 mA	
IDEIORB#	82	Output	24 mA	
IDEDAKA#	94	Output	24 mA	
IDEDAKB#	93	Output	24 mA	
DA[2:0]	88, 90, 89	Output	24 mA	
DD[15:0]	98, 101, 103, 105, 108, 110, 112, 114, 115, 113, 111, 109, 106, 104, 102, 100	Input/Output	24 mA	
BCLK	200	Output	Clock Std.	Note 2
LA[23:17]	176, 178, 180, 182, 184, 187, 189	Input/Output	24 mA	
SA[16:0]	144, 145, 147-149, 151, 152, 155, 158, 160, 162, 164, 165, 167, 169, 171, 173	Input/Output	24 mA	
REFRESH#	150	Input/Output	24 mA	
MEMR#	141	Input/Output	24 mA	
MEMW#	142	Input/Output	24 mA	
IOR#	140	Input/Output	24 mA	
IOW#	139	Input/Output	24 mA	
SMEMR#	138	Output	24 mA	
SMEMW#	137	Output	24 mA	
SBHE#	174	Input/Output	24 mA	
M16#	175	Input/Output	24 mA	

IOCHRDY	135	Input/Output	24 mA	
BALE	168	Output	24 mA	
AEN	136	Output	24 mA	
TC	166	Output	24 mA	
DAK[2:0]	194, 192, 195	Output	24 mA	
PMACT#/ISARST	5	Output	16 mA	
SD[15:0]	208-204, 202, 199, 197, 123, 125, 126, 128-131, 133	Input/Output	24 mA	
SECURITY/XDR#	116	Input/Output	24 mA	
XOE#	117	Input/Output	24 mA	
XCS0/ROMCS	119	Output	24 mA	
XCS1/X8XCS	118	Output	24 mA	
INT	10	Output	4 mA	
NMI	11	Output	4 mA	
INIT	3	Output	4 mA	
SPKR	134	Output	24 mA	
IGNNE#/HRESET#	4	Output	6 mA	

Note 1: The driving capacity of these I/O cells is based on PCI specification

Note 2: This is the clock output buffer.

Note 3: At this current, V_{OLmax} <= 0.4V, V_{OHmin} >= 3.0V