MAXIM

Low Power, 3½ Digit A/D Converter

ICL7137

General Description

The Maxim ICL7137 is a monolithic analog to digital converter with all the necessary active devices to directly interface with a light emitting diode (LED) display. Excluding the LED display current, the ICL7137 supply current is under 200μA, making it suitable for battery operation.

Versatility and accuracy are inherent features of this converter. The dual-slope conversion technique automatically rejects interference signals common in industrial environments. The true differential input and reference are particularly useful when making ratiometric measurements (ohms or bridge transducers), and the zero-integrator phase in Maxim's ICL7137 eliminates overrange hangover and hysteresis effects. Finally, this device offers high accuracy by lowering rollover error to less than one count and zero reading drift to less than 1μV/°C.

Applications

These devices can be used in a wide range of digital panel meter applications. Most applications, however, involve the measurement and display of analog data:

Pressure	Conductance
Voltage	Current
Resistance	Speed
Temperature	Material Thickness

Features

- **Improved 2nd Source! (see 3rd page for "Maxim Advantage™")**
- **Guaranteed first reading recovery from overrange**
- **Zero Input Gives Zero Reading**
- **Drives LED Displays Directly**
- **Low Noise (15μV p-p) without hysteresis or overrange hangover**
- **True Differential Reference and Input**
- **Monolithic, Low Power CMOS Design**

Ordering Information

PART	TEMP. RANGE	PACKAGE
ICL7137CPL	0°C to +70°C	40 Lead Plastic DIP
ICL7137CJL	0°C to +70°C	40 Lead CERDIP
ICL7137CQH	0°C to +70°C	44 Lead Plastic Chip Carrier
ICL7137C/D	0°C to +70°C	Dice

Typical Operating Circuit

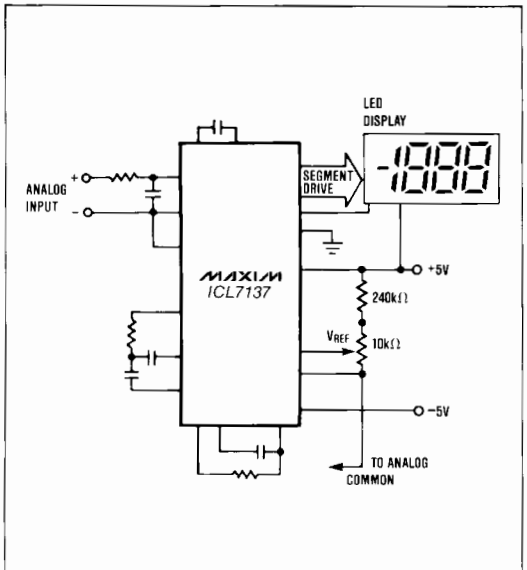

(Detailed Circuit Diagram—See last page)

Pin Configuration

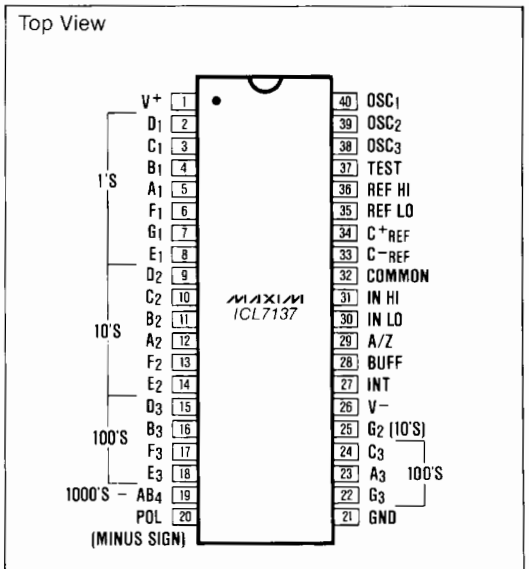

See last page for Plastic Chip Carrier Pin Configuration

The "Maxim Advantage™" signifies an upgraded quality level. At no additional cost we offer a second-source device that is subject to the following: guaranteed performance over temperature along with tighter test specifications on many key parameters; and device enhancements, when needed, that result in improved performance without changing the functionality.

Low Power, 3½ Digit A/D Converter

ABSOLUTE MAXIMUM RATINGS

Supply Voltage V^+ ..... +6V
V^- ..... -9V
Analog Input Voltage (either input) (Note 1) ..... V^+ to V^-
Reference Input Voltage (either input) ..... V^+ to V^-
Clock Input ..... GND to V^+

Power Dissipation (Note 2)
Cerdip Package 1000mW
Plastic Package 800mW
Operating Temperature Range ..... 0°C to +70°C
Storage Temperature Range ..... -65°C to +160°C
Lead Temperature (Soldering, 60 sec.) ..... +300°C

Note 1: Input voltages may exceed the supply voltages, provided the input current is limited to ±100μA.

Note 2: Dissipation rating assumes device is mounted with all leads soldered to printed circuit board.

Stresses above those listed under "Absolute Maximum Ratings" may cause permanent damage to the device. These are stress ratings only and functional operation of the device at these or any other conditions above those indicated in the operational sections of the specifications is not implied. Exposure to absolute maximum rating conditions for extended periods may affect device reliability.

ELECTRICAL CHARACTERISTICS (Note 3)

PARAMETERS	CONDITIONS	MIN	TYP	MAX	UNITS
Zero Input Reading	V_{IN} = 0.0V Full Scale = 200.0mV	-000.0	±000.0	+000.0	Digital Reading
Ratiometric Reading	$V_{IN} = V_{REF}$, V_{REF} = 100mV	999	999/1000	1000	Digital Reading
Rollover Error (Difference in reading for equal positive and negative reading near full scale)	$-V_{IN} = +V_{IN} \cong$ 200.0mV	-1	±0.2	+1	Counts
Linearity (Max. deviation from best straight line fit)	Full Scale = 200.0mV or full scale = 2.000V	-1	±0.2	+1	Counts
Common Mode Rejection Ratio (Note 4)	V_{CM} = ± 1V, V_{IN} = 0V Full Scale = 200.0mV		30		μV/V
Noise (Pk-Pk value not exceeded 95% of time)	V_{IN} = 0V, Full Scale = 200.0mV		15		μV
Leakage Current @ Input	V_{IN} = 0		1	10	pA
Zero Reading Drift	V_{IN} = 0V, 0° < T_A < +70°C		0.2	1	μV/°C
Scale Factor Temperature Coefficient	V_{IN} = 199.0mV, 0°C < T_A < +70°C (Ext. Ref. 0ppm/°C)		1	5	ppm/°C
V^+ Supply Current (Does not include LED current)	V_{IN} = 0V (Note 5)		70	200	μA
V^- Supply Current			40		μA
Analog COMMON Voltage (With respect to positive supply)	250kΩ between Common and Positive Supply	2.6	3.0	3.2	V
Temp. Coeff. of Analog COMMON (with respect to Positive Supply)	250kΩ between Common and Positive Supply		80		ppm/°C
Segment Sinking Current (Except Pin 19) (Pin 19 only)	V^+ = 5.0V Segment Voltage = 3V	5 10	8.0 16		mA
Power Dissipation Capacitance	vs. Clock Frequency		40		pF

Note 3: Unless otherwise noted, specifications apply at T_A=25°C, f_{CLOCK}=16kHz and are tested in the circuit of Figure 1.
Note 4: Refer to "Differential Input" discussion in the ICL7136 data sheet.
Note 5: 48kHz oscillator, Figure 2, increases current by 35μA (typ).
Note 6: Extra capacitance of CERDIP package changes oscillator resistor value to 470kΩ or 150kΩ (1 reading/sec or 3 readings/sec).

The electrical characteristics above are a reproduction of a portion of Intersil's copyrighted (1983/1984) data book. This information does not constitute any representation by Maxim that Intersil's products will perform in accordance with these specifications. The "Electrical Characteristics Table" along with the descriptive excerpts from the original manufacturer's data sheet have been included in this data solely for comparative purposes.

Low Power, 3½ Digit A/D Converter

- Low Noise
- Key Parameters Guaranteed Over Temperature
- Guaranteed Overload Recovery Time
- Negligible Hysteresis
- Increased Maximum Rating for Input Current (Note 8)
- Maxim Quality and Reliability
- Significantly Improved ESD Protection (Note 7)

ABSOLUTE MAXIMUM RATINGS

This device conforms to the Absolute Maximum Ratings on adjacent page.

ELECTRICAL CHARACTERISTICS

Specifications below satisfy or exceed all "tested" parameters on adjacent page.
(V^+ = 9V; T_A = 25°C; f_{CLOCK} = 16kHz; test circuit - Figure 1 unless noted.)

PARAMETERS	CONDITIONS	MIN	TYP	MAX	UNITS
Zero Input Reading	V_{IN} = 0.0V, Full Scale = 200.0mV T_A = 25°C (Note 9) **0° ≤ T_A ≤ 70°C (Note 10)**	-000.0 **-000.0**	±000.0 **±000.0**	+000.0 **+000.0**	Digital Reading
Ratiometric Reading	V_{IN} = V_{REF}, V_{REF} = 100mV T_A = 25°C (Note 9) **0° ≤ T_A ≤ 70°C (Note 10)**	999 **998**	999/1000 **999/1000**	1000 **1001**	Digital Reading
Rollover Error (Difference in reading for equal positive and negative reading near Full Scale)	$-V_{IN}$ = $+V_{IN}$ ≅ 200mV T_A = 25°C (Note 9) 0° ≤ T_A ≤ +70°C (Note 10)	-1	±0.2 +0.2	+1	Counts
Linearity (Max. deviation from best straight line fit)	Full Scale = 200.0mV or full scale = 2.000V	-1	±0.2	+1	Counts
Common Mode Rejection Ratio	**V_{CM} = ± 1V, V_{IN} = 0V** **Full Scale = 200.0mV**	**-100**	**±5**	**+100**	μV/V
Noise (Pk-Pk value not exceeded 95% of time)	V_{IN} = 0V Full Scale = 200.0mV		10		μV
Input Leakage Current	V_{IN} = 0, T_A = 25°C (Note 9) **0° ≤ T_A ≤ +70°C**		1	10 **200**	pA
Zero Reading Drift	V_{IN} = 0V, 0° ≤ T_A ≤ 70°C (Note 9)		0.2	1	μV/°C
Scale Factor Temperature Coefficient	V_{IN} = 199.0mV 0° ≤ T_A ≤ +70°C (Ext. Ref. 0ppm/°C)(Note 9)		1	5	ppm/°C
V^+ Supply Current	V_{IN} = 0V T_A = 25°C **0° ≤ T_A ≤ 70°C**		60	200 **240**	μA
V^- Supply Current	V_{IN} = 0V,		**60**	**200**	μA
Analog Common Voltage (with respect to Pos. supply)	250kΩ between Common & Pos. Supply	2.6	2.8	3.2	V
Temp. Coeff. of Analog Common (with respect to Pos. Supply)	250kΩ between Common & Pos. Supply		75		ppm/°C
Segment Sinking Current (Except Pin 19) (Pin 19 only)	V^+ = 5.0V Segment Voltage = 3V	5 10	8.0 16		mA mA
Test Pin Voltage	**With Respect to V^+**	**4**	**5**	**6**	V
Overload Recovery Time (Note 11)	V_{IN} changing from ± 10V to 0V		0	1	Measurement Cycles

Note 7: All pins are designed to withstand electrostatic discharge (ESD) levels in excess of 2000V. (Test circuit per Mil. Std. 883C, Method 3015.2)
Note 8: Input voltages may exceed the supply voltage provided the input current is limited to ±1mA (This revises Note 1 on adjacent page).
Note 9: Test condition is V_{IN} applied between the "Analog Input" pins (Figure 1).
Note 10: 1MΩ resistor is removed in Figures 1 and 2.
Note 11: Number of measurement cycles for display to give accurate reading.

Low Power, 3½ Digit A/D Converter

Detailed Description

The Maxim ICL7137 3½ digit A/D converter is similar to the Maxim ICL7136 except for the LED segment driver outputs, and is similar to the ICL7107 except for much reduced power supply currents (exclusive of the LED currents.) For a detailed product description, component value selection, and package dimensions, refer to Maxim's ICL7136 data sheets; for applications information refer to Maxim's ICL7107 data sheets.

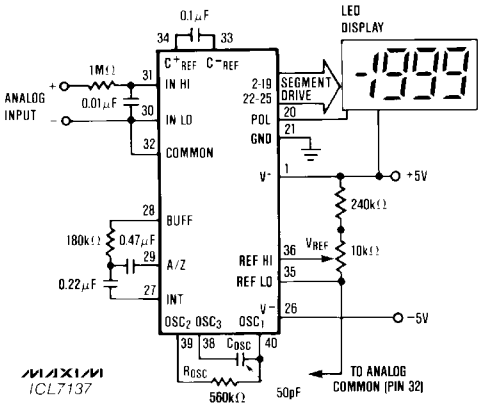

FULL SCALE INPUT	V_{REF}
200.0 mV	100.0mV

Figure 1. Maxim ICL7137 Typical Operating Circuit Clock Frequency 16kHz (1 reading/sec)

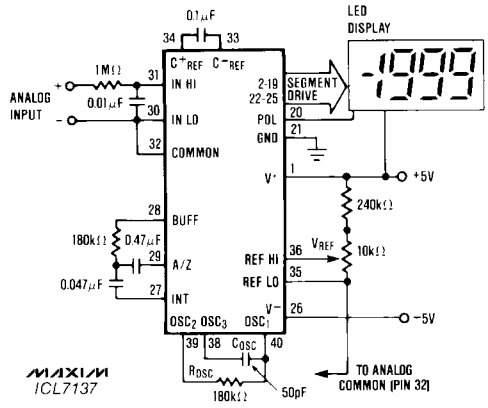

FULL SCALE INPUT	V_{REF}
200.0 mV	100.0mV

Figure 2. Maxim ICL7137 Typical Operating Circuit Clock Frequency 48kHz (3 reading/sec)

Chip Topography

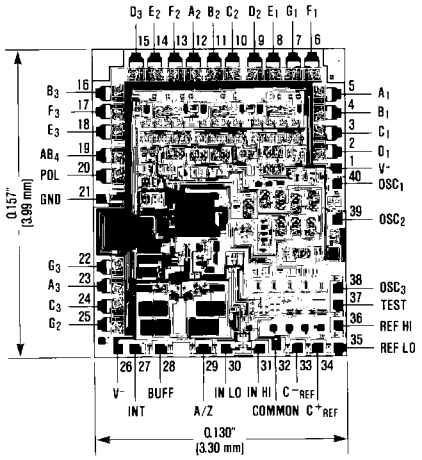

Pin Configuration

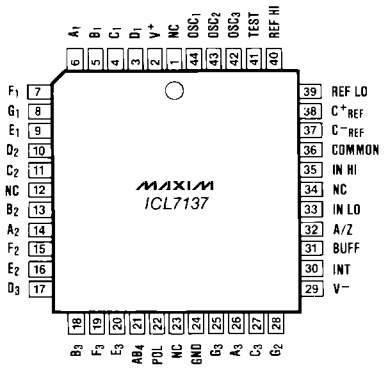

44 Lead Plastic Chip Carrier (Quad Pack)

Maxim cannot assume responsibility for use of any circuitry other than circuitry entirely embodied in a Maxim product. No circuit patent licenses are implied. Maxim reserves the right to change the circuitry and specifications without notice at any time.