TECHNICAL DATA

4CX5000A
4CX5000R
VHF POWER TETRODES

The EIMAC 8170/4CX5000A and 8170W/4CX5000R are ceramic/metal power tetrodes. They are rated for full power input to 110 MHz and are recommended for use as an rf linear amplifier, a Class AB audio amplifier, or a Class C power amplifier or plate-modulated amplifier. Anode dissipation is 6 kW maximum. The two tubes are electrically identical, though internally the 8170W/4CX5000R has a mesh filament and a more rugged support structure for applications which may involve occasional shock or vibration.

Air-system sockets and matching air chimneys are available from EIMAC.

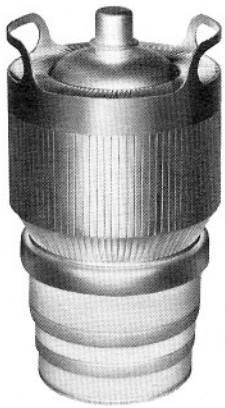

GENERAL CHARACTERISTICS[1]

ELECTRICAL

Filament: Thoriated-Tungsten	
Voltage	7.5 ± 0.37 V
Current, at 7.5 volts	75 A
Amplification Factor (average), Grid to Screen[2]	4.5
Direct Interelectrode Capacitance (grounded filament)[2]	
Cin	120 pF
Cout	20.5 pF
Cgp	0.7 pF
Direct Interelectrode Capacitance (grounded grid)[2]	
Cin	56 pF
Cout	21.5 pF
Cpk	0.1 pF
Maximum Frequency for Full Ratings (CW)	110 MHz

1. Characteristics and operating values are based on performance tests. These figures may change without notice as the result of additional data or product refinement. Varian EIMAC should be consulted before using this information for final equipment design.
2. Capacitance values are for a cold tube as measured in a special shielded fixture in accordance with Electronic Industries Association Standard RS-191.

MECHANICAL

Maximum Overall Dimensions:	
Length	9.13 In; 23.18 cm
Diameter	4.94 In; 12.54 cm
Net Weight	9.5 Lb; 4.3 kg
Operating Position	Vertical, Base Up or Down
Maximum Operating Temperature, Ceramic/Metal Seals or Envelope	250°C
Cooling	Forced Air
Base	Special Concentric
Recommended Air-System Socket: For LF or HF Service	EIMAC SK-300A
For VHF Service	EIMAC SK-360
Recommended Air-System Chimney: For the SK-300A Socket	EIMAC SK-306
For the SK-360 Socket	EIMAC SK-356
Recommended Screen Grid Bypass Capacitor Kit for the SK-360 Socket	EIMAC SK-355
Available Anode Connector Clip	EIMAC ACC-3

RADIO FREQUENCY LINEAR AMPLIFIER
GRID DRIVEN - Class AB1

ABSOLUTE MAXIMUM RATINGS

DC PLATE VOLTAGE	7500 VOLTS
DC SCREEN VOLTAGE	1600 VOLTS
DC PLATE CURRENT	4.0 AMPERES
PLATE DISSIPATION	6 KILOWATTS
SCREEN DISSIPATION	250 WATTS
GRID DISSIPATION	75 WATTS

* Approx.value.
\# Adjust to specified zero-signal dc plate current.

TYPICAL OPERATION (Frequencies to 110 MHz)
Class AB1, Grid Driven, Peak Envelope or Modulation Crest Conditions

Plate Voltage	7500	Vdc
Screen Voltage	1250	Vdc
Grid Voltage #	-300	Vdc
Zero-Signal Plate Current	0.50	Adc
Single-Tone Plate Current	1.90	Adc
Single-Tone Screen Current *	0.20	Adc
Peak rf Grid Voltage *	300	v
Plate Dissipation	4200	W
Single-Tone Plate Output Power	10	kW

394400(Effective May 85; supersedes April 69 [4CX5000A] & May 76 [4CX5000R]) Printed in U.S.A.
VA4842

RF POWER AMPLIFIER OR OSCILLATOR
Class C Telegraphy or FM
(Key-down conditions)

ABSOLUTE MAXIMUM RATINGS

DC PLATE VOLTAGE . . .	7500 VOLTS
DC SCREEN VOLTAGE . .	1500 VOLTS
DC GRID VOLTAGE . . .	-500 VOLTS
DC PLATE CURRENT . . .	3.0 AMPERES
PLATE DISSIPATION . .	5 KILOWATTS
SCREEN DISSIPATION . .	250 WATTS
GRID DISSIPATION . . .	75 WATTS

TYPICAL OPERATION (Frequencies to 110 MHz)

DC Plate Voltage	6500	Vdc
DC Screen Voltage	750	Vdc
DC Grid Voltage	-350	Vdc
DC Plate Current	2.3	Adc
DC Screen Current *	0.2	Adc
DC Grid Current *	0.05	Adc
Measured Driving Power *	100	W
Useful Output Power * #	10	kW

* Approximate value.
\# Measured at the load.

PLATE MODULATED RF POWER AMPLIFIER
Grid Driven
Class C Telephony - Carrier Conditions

ABSOLUTE MAXIMUM RATINGS

DC PLATE VOLTAGE . . .	5000 VOLTS
DC SCREEN VOLTAGE . .	1000 VOLTS
DC GRID VOLTAGE . . .	-500 VOLTS
DC PLATE CURRENT . . .	2.5 AMPERES
PLATE DISSIPATION # .	3.5 KILOWATTS
SCREEN DISSIPATION ##	250 WATTS
GRID DISSIPATION ## .	75 WATTS

\# Corresponds to 5 kW at 100% sine-wave modulation.

TYPICAL OPERATION

DC Plate Voltage	5000	Vdc
DC Screen Voltage	500	Vdc
Peak AF Screen Voltage (100% Modulation)	450	v
DC Grid Bias Voltage	-400	Vdc
DC Plate Current	1.4	Adc
DC Screen Current *	0.26	Adc
DC Grid Current *	0.05	Adc
Peak rf Grid Voltage *	520	v
Grid Driving Power (calculated) * . . .	25	W
Plate Dissipation *	1200	W
Plate Output Power *	5.8	kW

* Approximate value.
\## Average, with or without modulation.

AUDIO FREQUENCY AMPLIFIER OR MODULATOR
Grid Driven, Class AB1, Sinusoidal Wave

ABSOLUTE MAXIMUM RATINGS

DC PLATE VOLTAGE . . .	7500 VOLTS
DC SCREEN VOLTAGE . .	1500 VOLTS
DC PLATE CURRENT . . .	4.0 AMPERES
PLATE DISSIPATION . .	6 KILOWATTS
SCREEN DISSIPATION . .	250 WATTS
GRID DISSIPATION . . .	75 WATTS

* Approximate value. # Per tube.
\## Adjust for specified zero-signal plate current.

TYPICAL OPERATION (two tubes)

DC Plate Voltage	4000	5000	6000	7000	Vdc
DC Screen Voltage . . .	1250	1250	1250	1250	Vdc
DC Grid Voltage ## . . .	-270	-280	-310	-325	Vdc
Zero-Sig.Plate Current .	1.25	1.00	0.83	0.70	Adc
Max.Sig.Plate Current .	5.10	4.40	4.25	3.65	Adc
Max.Sig.Screen Current *	0.35	0.33	0.30	0.24	Adc
Peak AF Grid Voltage * #	250	240	270	235	v
Driving Power	0	0	0	0	W
Load Res. Plate/Plate .	1500	2370	2940	4100	Ohms
Max.Sig.Plate Diss. * #	4200	4200	4200	4200	W
Plate Output Power * . .	11.5	13.5	17.0	17.5	kW

TYPICAL OPERATION values are obtained by measurement or by calculation from published characteristic curves. To obtain the specified plate current at the specified bias, screen, and plate voltages, adjustment of the rf grid voltage is assumed. If this procedure is followed, there will be little variation in output power when the tube is replaced, even though there may be some variation in grid and screen currents. The grid and screen currents which occur when the desired plate current is obtained are incidental and vary from tube to tube. These current variations cause no performance degradation providing the circuit maintains the correct voltage in the presence of the current variations.

RANGE VALUES FOR EQUIPMENT DESIGN	Min.	Max.	
Filament: Current at 7.5 volts	73	78	A
Interelectrode Capacitance (grounded filament connection) [1]			
Cin	108	122	pF
Cout	18	23	pF
Cgp	---	1.0	pF
Interelectrode Capacitance (grounded grid connection) [1]			
Cin	48	58	pF
Cout	19	24	pF
Cpk	---	0.16	pF

1 Capacitance values are for a cold tube as measured in a special shielded fixture in accordance with Electronic Industries Standard RS-191.

APPLICATION

MECHANICAL

MOUNTING - The tube must be mounted vertically, base up or down at the convenience of the circuit designer.

SOCKETING - An air-system socket should be used in all applications to assure cooling of the tube base seals. The originally recommended SK-300 socket is still available for special replacement requirements but is now considered obsolete for new applications. The EIMAC SK-300A is now recommended for audio or LF/HF rf operation; the SK-360 is recommended for VHF operation. The SK-360 incorporates low-inductance filament bypassing in the form of three 5000 pF copper-clad Kapton®capacitors. A screen grid bypass capacitor kit (the SK-355) is also available for the SK-360 socket, and includes eight 1000 pF 5000 DCWV capacitors (EIMAC P/N 050706), sixteen mounting clips (EIMAC P/N 242859), and an assembly drawing (EIMAC P/N 243135) which shows how the parts are attached to the socket.

COOLING - The tubes requires forced-air cooling in all applications and an air-system socket is recommended with a matching air chimney. Normally the tube socket is mounted in a pressurized compartment so the cooling air passes through the socket and is then guided to the anode cooling fins by an air chimney. Two chimneys are available from EIMAC, the SK-306 for use with the SK-300A socket at frequencies below 30 MHz, and the SK-356 for use with the SK-360 at VHF. If all cooling air is not passed around the base of the tube and through the socket, then arrangements must be made to assure adequate cooling of the tube base.

Though the maximum temperature rating for seals and the anode core is 250°C, it is considered good engineering practice to allow some safety factor and the table shown is for sea level with cooling air at 50°C and maximum tube temperatures of 200 °C. A safety factor makes some allowance for variables such as dirty air filters, dirty tube anode cooling fins which effect cooling efficiency, duct losses, etc. The figures shown are for the tube in an air-system socket with an air chimney in place, with air passing in a base-to-anode direction. The pressure drop values shown are approximate and are for the tube/socket/chimney combination.

Plate Diss. (Watts)	Air Flow (cfm)	Press.Drop Inches Water
2000	75	0.4
3000	105	0.7
4000	145	1.1
5000	190	1.5
6000	230	2.0

At altitudes significantly above sea level both the flow rate must be increased for equivalent cooling. At 5000 feet both the flow rate and the pressure drop will increase by a factor of 1.20, while at 10,000 feet both flow rate and pressure drop must be increased by 1.46.

Anode and base cooling should be applied before or simultaneously with filament voltage turnon and should normally continue for a brief period after shutdown to allow the tube to cool down properly.

IMPACT AND VIBRATION - The 4CX5000A has a standard thoriated tungsten filament/cathode and element structure and is intended for regular commercial service.

The 4CX5000R incorporates a more rugged internal construction, including a sturdy mesh-type thoriated tungsten filament. The tube will withstand shock and vibration which might disable a less rugged tube and is periodically tested [cold test; no voltages applied] under 50G long-duration [11 milliseconds] shock conditions, and also under vibration conditions [sine-wave] at 5G from 14 to 200 Hz and 2G from 200 to 500 Hz. Such environmental conditions will not ordinarily injure the tube unless prolonged.

If environmental stress is expected care must be taken to prevent any relative motion between tube and socket as if this occurs both are likely to be damaged. If mechanical amplification is a possibility special isolation mounting and support may be required.

Any tube with a thoriated tungsten filament should always be protected from undue shock and vibration and if not installed in equipment should always be stored in its protective packing material in its shipping container.

ELECTRICAL

ABSOLUTE MAXIMUM RATINGS - Values shown for each type of service are based on the "absolute system" and are not to be exceeded under any service conditions. These ratings are limiting values outside which the serviceability of the tube may be impaired. In order not to exceed absolute ratings the equipment designer has the responsibility of determining an average design value for each rating below the absolute value of that rating by a safety factor so the absolute values will never be exceeded under any usual conditions of supply-voltage variation, load variation, or manufacturing variation in the equipment itself. It does not necessarily follow that combinations of absolute maximum ratings can be attained simultaneously.

HIGH VOLTAGE - Normal operating voltages used with this tube are deadly, and the equipment must be designed properly and operating precautions must be followed. Design all equipment so that no one can come in contact with high voltages. All equipment must include safety enclosures for high-voltage circuits and terminals, with interlock switches to open primary circuits of the power supply and to discharge high-voltage capacitors whenever access doors are opened. Interlock switches must not be bypassed or "cheated" to allow operation with access doors open. Always remember that HIGH VOLTAGE CAN KILL.

FILAMENT OPERATION - At rated (nominal) filament voltage the peak emission capability of the tube is many times that needed for communication service. A reduction in filament voltage will lower the filament temperature, which will substantially increase life expectancy. The correct value of filament voltage should be determined for the particular application. It is recommended the tube be operated at full nominal voltage for an initial

stabilization period of 100 to 200 hours before any action is taken to operate at reduced voltage. The voltage should gradually be reduced until a slight degradation in performance is noticed (such as power output or distortion). The filament voltage should then be increased a few tenths of a volt above the value where performance degradation was noted for operation. The operating point should be rechecked after 24 hours. Filament voltage should be closely regulated when voltage is to be reduced below nominal in this manner, to avoid any adverse influence by normal line voltage variations. EIMAC Application Bulletin #18 titled EXTENDING TRANSMITTER TUBE LIFE contains considerable detail and is available on request.

Filament voltage should be measured at the tube base or socket, using an accurate rms-responding meter. Periodically throughout the life of the tube the procedure outlined above for reduction of voltage should be repeated, with voltage reset as required, to assure best tube life.

GRID OPERATION - Maximum control grid dissipation is 75 watts, determined approximately by the product of the dc grid current and the peak positive grid voltage. A protective spark-gap device should be connected between control grid and cathode to guard against excessive voltage.

SCREEN OPERATION - The maximum screen grid dissipation is 250 watts. With no ac applied to the screen grid, dissipation is simply the product of dc screen voltage and the dc screen current. With screen modulation, dissipation is dependent on rms screen voltage and rms screen current. Plate voltage, plate loading, or bias voltage must never be removed while filament and screen voltages are present, since screen dissipation ratings will be exceeded. A protective spark-gap device should be connected between the screen grid and the cathode to guard against excessive voltage.

PLATE DISSIPATION - The rated maximum plate dissipation of the tube is 6 kilowatts, which may be safely sustained with adequate air cooling. When the tube is used as a plate-modulated rf amplifier the dissipation under carrier conditions should be limited to 3.5 kilowatts.

FAULT PROTECTION - In addition to the normal plate over-current interlock, screen current interlock, and coolant interlock, the tube must be protected from internal damage caused by an internal plate arc which may occur at high plate voltage. A protective resistance should always be connected in series with each tube anode, to help absorb power supply stored energy if an internal arc should occur. An electronic crowbar, which will discharge power supply capacitors in a few microseconds after the start of an arc, is recommended. The protection criteria for each electrode supply is to short each electrode to ground, one at a time, through a vacuum relay switch and a 6-inch length of #30 AWG copper wire. The wire will remain intact if protection is adequate.

EIMAC Application Bulletin #17 titled FAULT PROTECTION contains considerable detail and is available from EIMAC on request.

RADIO-FREQUENCY RADIATION - Avoid exposure to strong rf fields even at relatively low frequency. Absorption of rf energy by human tissue is dependent on frequency. Under 300 MHz most of the energy will pass completely through the human body with little attenuation or heating affect. Public health agencies are concerned with the hazard even at these frequencies. OSHA (Occupational Safety and Health Administration) recommends that prolonged exposure to rf radiation should be limited to 10 milliwatts per square centimeter.

INTERELECTRODE CAPACITANCE - The actual internal interelectrode capacitance of a tube is influenced by many variables in most applications, such as stray capacitance to the chassis, capacitance added by the socket used, stray capacitance between tube terminals, and wiring effects. To control the actual capacitance values within the tube, as the key component involved, the industry and Military Services use a standard test procedure as described in Electronic Industries Association Standard RS-191. This requires the use of a specially constructed test fixture which shields all external tube leads or contacts from each other and eliminates any capacitance reading to "ground". The test is performed on a cold tube. Other factors being equal, controlling internal tube capacitance in this way normally assures good interchangeability of tubes over a period of time. The capacitance values shown in the technical data are taken in accordance with Standard RS-191.

The equipment designer is therefore cautioned to make allowance for the actual capacitance values which will exist in the appliction. Measurements should be taken with the mounting which represents approximate final layout if capacitance values are highly significant in the design.

SPECIAL APPLICATIONS - When it is desired to operate this tube under conditions widely different from those listed here, write to Varian EIMAC; attn: Product Manager; 301 Industrial Way; San Carlos, CA 94070 U.S.A.

OPERATING HAZARDS

PROPER USE AND SAFE OPERATING PRACTICES WITH RESPECT TO POWER TUBES ARE THE RESPONSIBILITY OF EQUIPMENT MANUFACTURERS AND USERS OF SUCH TUBES. ALL PERSONS WHO WORK WITH OR ARE EXPOSED TO POWER TUBES OR EQUIPMENT WHICH UTILIZES SUCH TUBES MUST TAKE PRECAUTIONS TO PROTECT THEMSELVES AGAINST POSSIBLE SERIOUS BODILY INJURY. DO NOT BE CARELESS AROUND SUCH PRODUCTS.

The operation of this tube may involve the following hazards, any one of which, in the absence of safe operating practices and precautions, could result in serious harm to personnel:

a. HIGH VOLTAGE - Normal operating voltages can be deadly. Remember that HIGH VOLTAGE CAN KILL.

b. LOW-VOLTAGE HIGH-CURRENT CIRCUITS - Personal jewelry, such as rings, should not be worn when working with filament contacts or connectors as a short circuit can produce very high current and melting, resulting in severe burns.

c. RF RADIATION - Exposure to strong rf fields should be avoided, even at relatively low frequencies. The dangers of rf radiation are more severe at UHF and microwave frequencies and can cause serious bodily and eye injuries. CARDIAC PACEMAKERS MAY BE EFFECTED.

d. HOT SURFACES - Surfaces of tubes can reach temperatures of several hundred °C and cause serious burns if touched for several minutes after all power is removed.

Please review the detailed operating hazards sheet enclosed with each tube, or request a copy from: Varian EIMAC, Power Grid Application Engineering, 301 Industrial Way, San Carlos CA 94070.

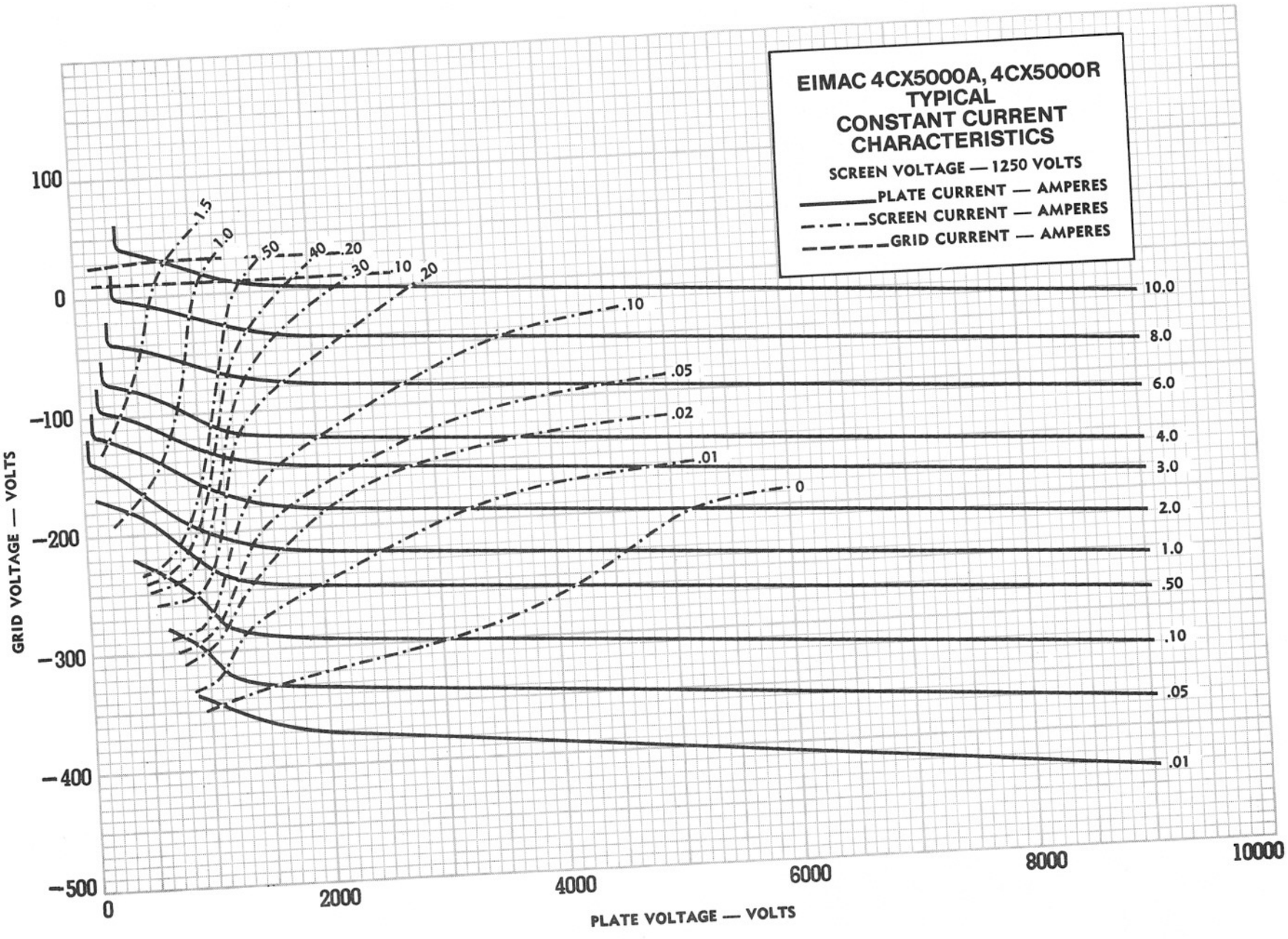
EIMAC 4CX5000A, 4CX5000R
TYPICAL
CONSTANT CURRENT
CHARACTERISTICS
SCREEN VOLTAGE — 1250 VOLTS
PLATE CURRENT — AMPERES
SCREEN CURRENT — AMPERES
GRID CURRENT — AMPERES
GRID VOLTAGE — VOLTS
100
0
−100
−200
−300
−400
−500
PLATE VOLTAGE — VOLTS
0
2000
4000
6000
8000
10000
10.0
8.0
6.0
4.0
3.0
2.0
1.0
.50
.10
.05
.01
1.5
1.0
.50
.40
.20
.30
.10
.20
.10
.05
.02
.01
0

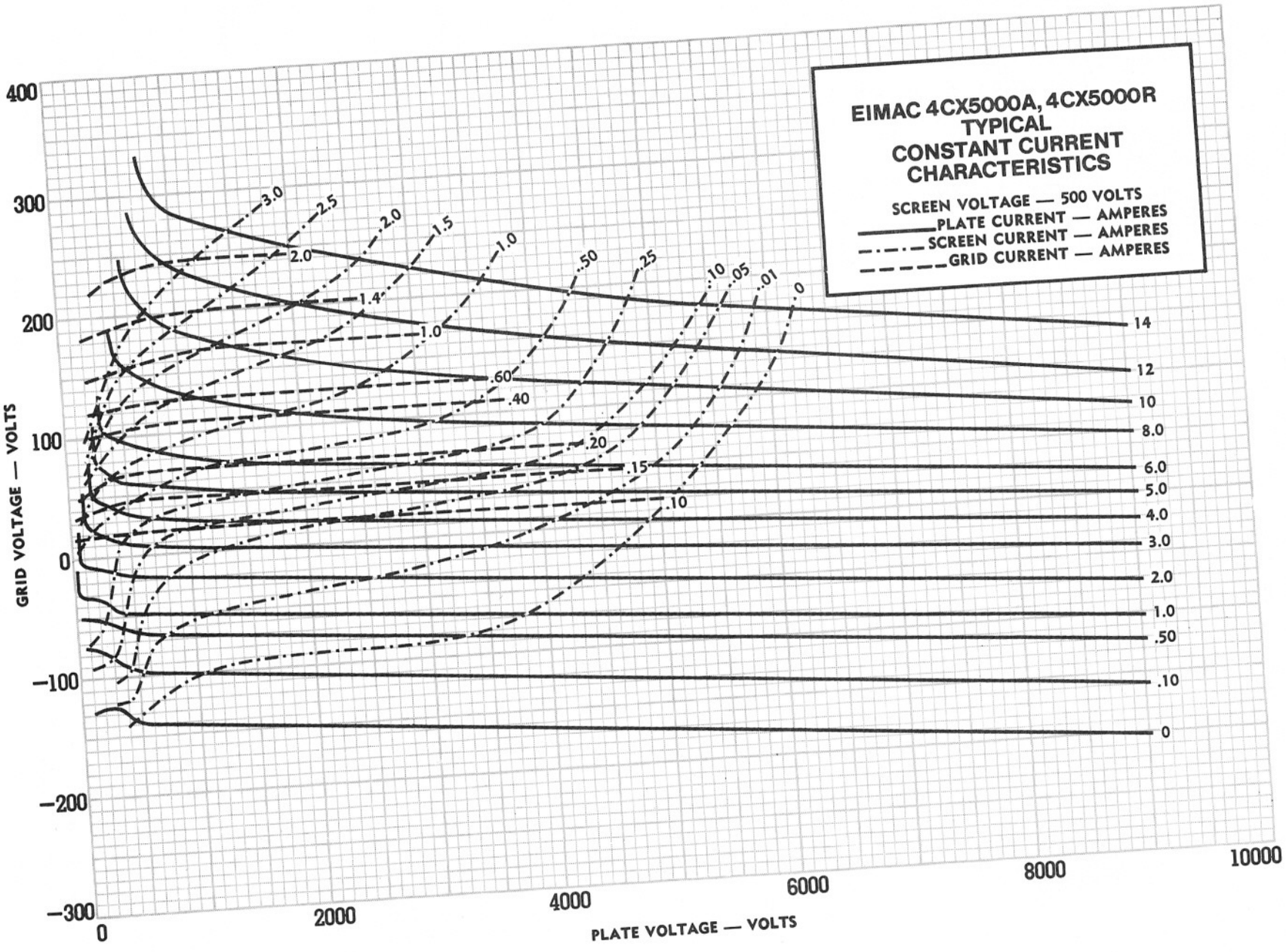
EIMAC 4CX5000A, 4CX5000R
TYPICAL
CONSTANT CURRENT
CHARACTERISTICS
SCREEN VOLTAGE — 500 VOLTS
PLATE CURRENT — AMPERES
SCREEN CURRENT — AMPERES
GRID CURRENT — AMPERES
GRID VOLTAGE — VOLTS
PLATE VOLTAGE — VOLTS
400
300
200
100
0
−100
−200
−300
0
2000
4000
6000
8000
10000
14
12
10
8.0
6.0
5.0
4.0
3.0
2.0
1.0
.50
.10
0
3.0
2.5
2.0
1.5
1.0
.50
.25
.10
.05
.01
0
2.0
1.4
1.0
.60
.40
.20
.15
.10

DIMENSIONAL DATA						
DIM.	INCHES			MILLIMETERS		
	MIN.	MAX.	REF.	MIN.	MAX.	REF
A	4.812	4.938	- -	122.22	125.43	- -
B	0.855	0.895	- -	21.72	22.73	- -
C	0.600	0.760	- -	15.24	19.30	- -
D	1.896	1.936	- -	48.16	49.17	- -
E	3.133	3.173	- -	79.58	80.59	- -
F	3.792	3.832	- -	96.32	97.33	- -
G	3.980	4.020	- -	101.09	102.11	- -
H	0.188	- -	- -	4.78	- -	- -
J	0.188	- -	- -	4.78	- -	- -
K	0.188	- -	- -	4.78	- -	- -
L	1.764	1.826	- -	44.81	46.38	- -
M	4.188	4.563	- -	106.38	115.90	- -
N	2.875	3.250	- -	.73.03	82.55	- -
P	8.625	9.125	- -	219.08	231.78	- -
R	0.986	1.050	- -	25.04	26.67	- -
S	3.875	4.250	- -	98.43	107.95	- -
T	0.375	- -	- -	9.53	- -	- -
U						
V						
W						
X						
Y						
Z						

NOTES:
1. REF. DIMENSIONS ARE FOR INFO. ONLY & ARE NOT REQUIRED FOR INSPECTION PURPOSES.

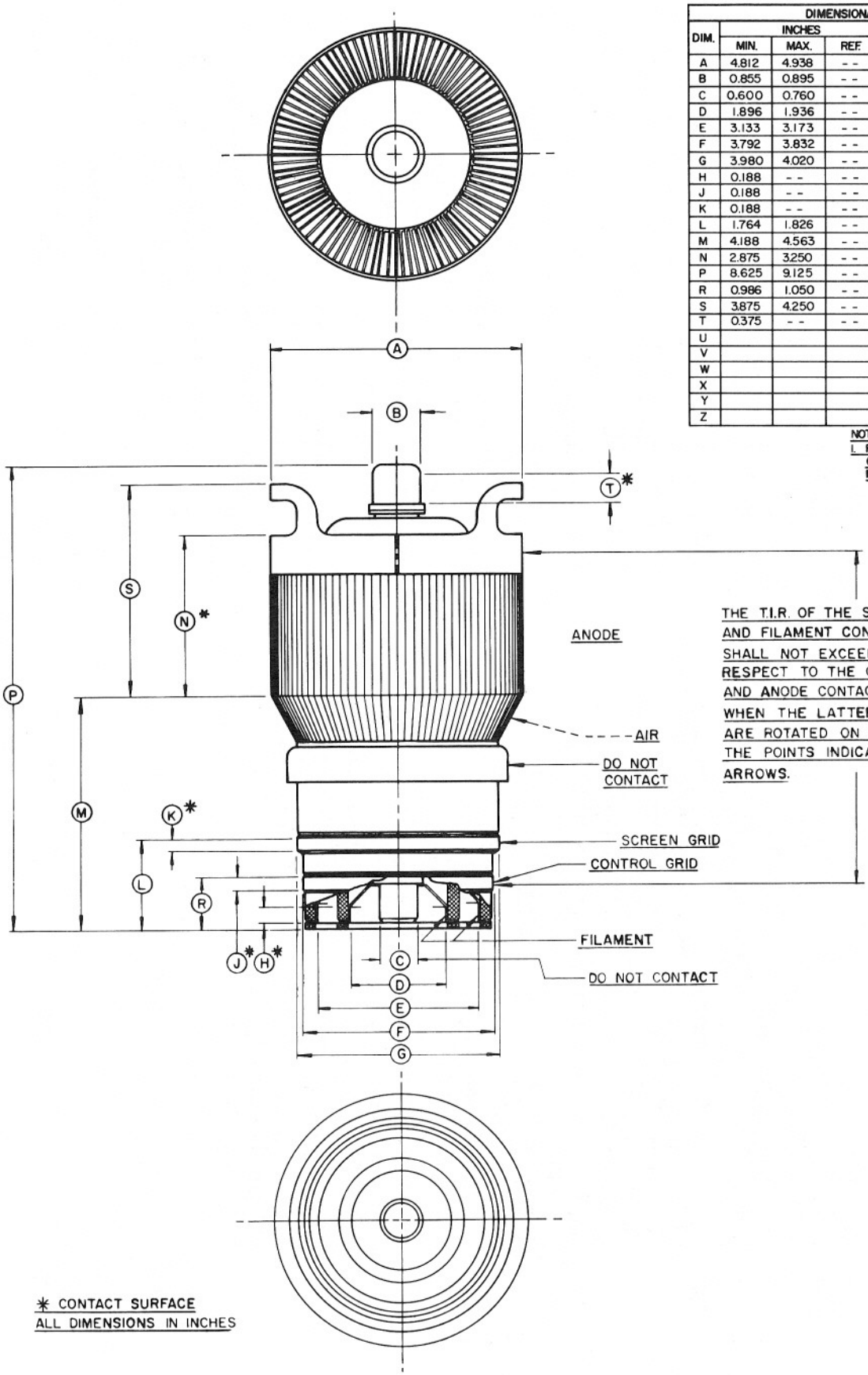

THE T.I.R. OF THE SCREEN GRID AND FILAMENT CONTACT SURFACES SHALL NOT EXCEED .040 WITH RESPECT TO THE CONTROL GRID AND ANODE CONTACT SURFACE WHEN THE LATTER SURFACES ARE ROTATED ON ROLLERS AT THE POINTS INDICATED BY THE ARROWS.

* CONTACT SURFACE
ALL DIMENSIONS IN INCHES