Data sheet

980 nm Pump Laser Module, Un-cooled

Bookham Technology's UC9B 980 nm Pump Laser Module is the second generation uncooled pump module providing higher power for highly reliable amplification for metro, cross-connect or other single/multi-channel amplification applications. The UC9**B uses a Mini-DIL package enabling low-cost and small form-factor. The G07 ridge-waveguide laser diode inside has been designed for uncooled operation at high temperature and power levels. Submarine qualification of the G07 chip ensures high reliability even at 200 mW, 70°C and beyond. External FBG stabilisation provides excellent wavelength and power stability over the entire temperature operating range.**

Features

- Operating temperature range from 0°C to 70°C (case)
- Mini-DIL housing for small size and low-cost
- G07 ridge-waveguide laser chip inside: enables 200+ mW operating power with Telecom reliability
- Total power consumption at 200 mW output power less than 1 W
- Wavelength stabilised by fibre Bragg grating over entire operating range
- Centre wavelength at 960, 974, 976 and 980 nm

Applications

- EDFA's or EDWA's requiring low-to-medium power 980 nm pump modules with low power consumption, small form-factor and low cost

Operating Characteristics

Parameter	Conditions	Min	Typ	Max	Unit
Temp. operating range	Case	0		70	°C
Linear power	@ 70°C	200			mW
Centre wavelength	FBG stabilised		980, 974, 976, 960		nm
Wavelength shift	0-70°C		1		nm
Operating power 1)	0-70°C		200		mW
Operating current, BOL	@200 mW, 70°C		450	550	mA
Operating voltage	@200 mW, 70°C		1.75	2.2	V
Total power consumption	@200 mW, 70°C		0.8		W

1) Module reliability is a function of operating temperature and current.
BOL: Beginning of life

Absolute Maximum Ratings

Parameter	Conditions	Min	Max	Unit
Laser forward current*	Tcase=0°C		900	mA
	Tcase=25°C		900	mA
	Tcase=70°C		800	mA
Laser reverse voltage			2.5	V
PD reverse voltage			20	V
PD forward current			5	mA
Storage temperature	non-condensing	-40	75	°C

* Laser failure rate is a function of temperature and laser current. Operation within the absolute ratings ensures predictable failure behaviour. Operation outside may cause irreversible or latent chip damage.
Note: Photo diode (PD) bias –5 V

Assembly Information

- G07 chip inside
- FBG to module distance of ~ 2 m
- Fibre Type: puremode HI1060

Package Outline Drawing and Dimensions

Dimension in mm [inch]

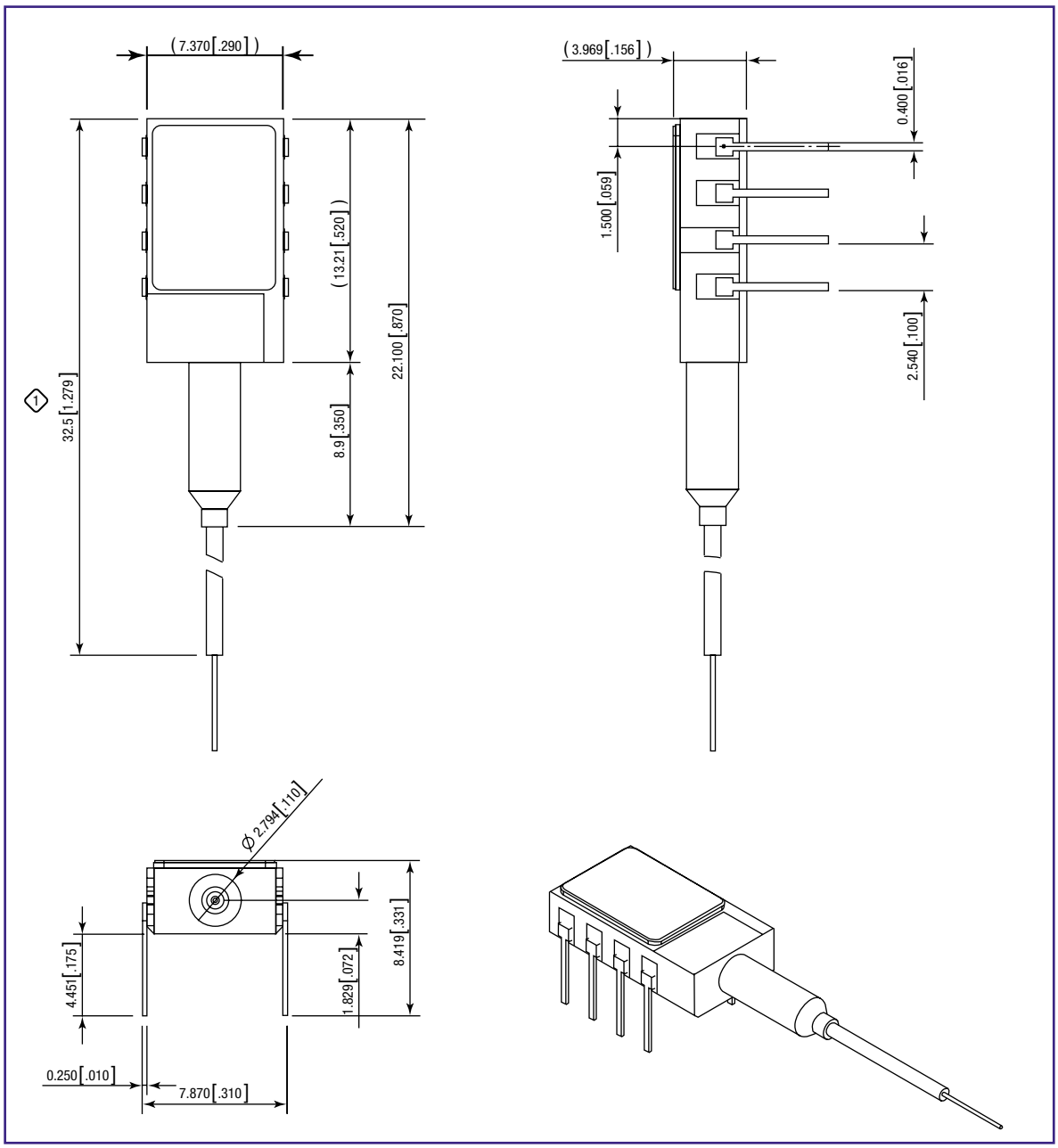

Figure 1: Package Outline

Package Pin Configuration

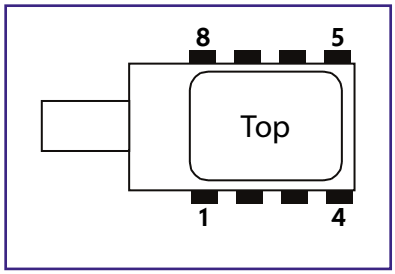

Figure 2: Pin Configuration

Pin #	Function	Pin #	Function
1	Not connected; thermistor optional	5	Photodiode anode
2	Package ground	6	Laser cathode
3	Not connected; thermistor optional	7	Laser anode
4	Photodiode cathode	8	Not connected

Bookham TECHNOLOGY

Thinking optical solutions

Ordering Information

Product Code	Product Name
UC980B	980 nm Pump Laser Module, Un-cooled – MiniDIL series
UC976B	976 nm Pump Laser Module, Un-cooled – MiniDIL series
UC974B	974 nm Pump Laser Module, Un-cooled – MiniDIL series
UC960B	960 nm Pump Laser Module, Un-cooled – MiniDIL series

Invisible Laser radiation - avoid eye or skin exposure to direct or scattered radiation
CLASS 4 LASER PRODUCT

REFERENCE IEC 60825-1 Edition 1.2

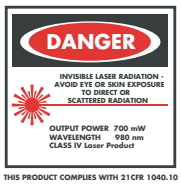

THIS PRODUCT COMPLIES WITH 21CFR 1040.10

ISO 9001
FM 68159

North America

Bookham Technology Inc.
49 Buford Highway
Suwanee
GA 30024
USA

- **Tel: +1 678 482 4021**
- **Fax: +1 678 482 4022**

Europe

Bookham Technology plc
Brixham Road
Paignton
Devon
TQ4 7BE
UK

- **Tel: +44 (0) 1803 66 2875**
- **Fax: +44 (0) 1803 66 2801**

Asia

Bookham Technology plc
21/F Cityplaza One
1111 King's Road
Quarry Bay
Hong Kong

- **Tel: +852 (2100) 2249**
- **Fax: +852 (2100) 2585**

Sales@bookham.com

Important Notice

Bookham Technology has a policy of continuos improvement, as a result certain parameters detailed on this flyer may be subject to change without notice. If you are interested in a particular product please request the available from any Bookham Technology sales representative.

© Bookham Technology 2003 Bookham & ASOC are registered trademarks of Bookham Technology plc