# 27-30GHz High Power Amplifier

## GaAs Monolithic Microwave IC

preliminary

## Description

The CHA5296 is a high gain three-stage monolithic high power amplifier. It is designed for a wide range of applications, from military to commercial communication systems. The backside of the chip is both RF and DC grounds. This helps simplify the assembly process.

The circuit is manufactured with a PM-HEMT process on 50µm substrate thickness, 0.25µm gate length, via holes through the substrate, air bridges and electron beam gate lithography.
It is available in chip form.

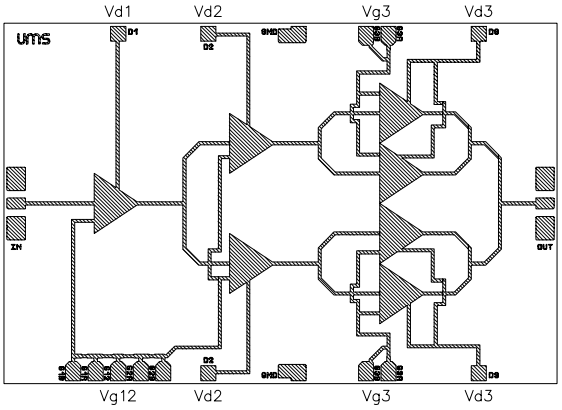


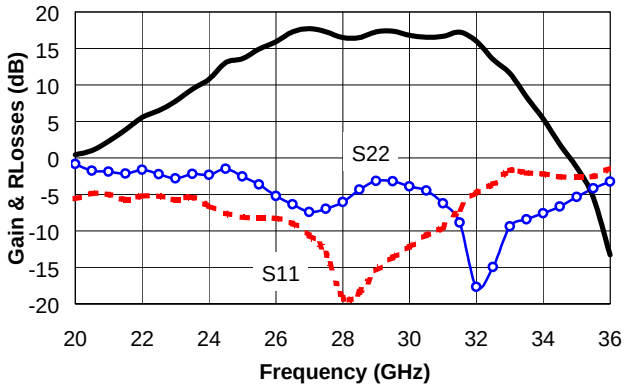


**Typical on jig Measurements**

## Main Features

- Performances : 27-30GHz
- 29dBm output power @ 1dB comp. gain
- 15 dB ± 1dB gain
- DC power consumption, 850mA @ 6V
- Chip size : 3.80 x 2.52 x 0.05 mm

## Main Characteristics

Tamb. = 25°C

| Symbol | Parameter | Min | Typ | Max | Unit |
|---|---|---|---|---|---|
| Fop | Operating frequency range | 27 | | 30 | GHz |
| G | Small signal gain | 14 | 15 | | dB |
| P1dB | Output power at 1dB gain compression | 28 | 29 | | dBm |
| Id | Bias current | | 850 | 1000 | mA |

ESD Protection : Electrostatic discharge sensitive device. Observe handling precautions !



**United Monolithic Semiconductors S.A.S.**
**Route Départementale 128 - B.P.46 - 91401 Orsay Cedex France**
**Tel. : +33 (0)1 69 33 03 08 - Fax : +33 (0)1 69 33 03 09**

preliminary

## Electrical Characteristics

Tamb = +25°C, Vd = 6V Id #900mA

| Symbol | Parameter | Min | Typ | Max | Unit |
|---|---|---|---|---|---|
| Fop | Operating frequency range (1) | 27 | | 30 | GHz |
| G | Small signal gain (1) | 14 | 15 | | dB |
| ΔG | Small signal gain flatness (1) | | ±1 | | dB |
| Is | Reverse isolation | | 50 | | dB |
| P1dB | Pulsed output power at 1dB compression (1) | 28 | 29 | | dBm |
| P03 | Output power at 3dB gain compression (1) | 29 | 30 | | dBm |
| IP3 | 3rd order intercept point (2) | | 41 | | dBm |
| PAE | Power added efficiency at Psat | 12 | 16 | | % |
| VSWRin | Input VSWR (2) | | | 5:1 | |
| VSWRout | Output VSWR (2) | | | 2.5:1 | |
| Tj | Junction temperature for 80°C backside | | 170 | | °C |
| Id | Bias current @ small signal | | 850 | 1000 | mA |

(1) These values are representative for pulsed on-wafer measurements that are made without bonding wires at the RF ports.
(2) Value representative for CW on jig measurement.

## Absolute Maximum Ratings

Tamb. = 25°C (1)

| Symbol | Parameter | Values | Unit |
|---|---|---|---|
| Vd | Drain bias voltage | 6.25 | V |
| Id | Drain bias current | 1450 | mA |
| Vg | Gate bias voltage | -2.5 to +0.4 | V |
| Vgd | Negative gate drain voltage ( = Vg - Vd) | -8 | V |
| Pin | Maximum peak input power overdrive (2) | +18 | dBm |
| Ta | Operating temperature range | -40 to +80 | °C |
| Tstg | Storage temperature range | -55 to +125 | °C |

(1) Operation of this device above anyone of these parameters may cause permanent damage.
(2) Duration < 1s.



Route Départementale 128 , B.P.46 - 91401 ORSAY Cedex - FRANCE
Tel.: +33 (0)1 69 33 03 08 - Fax : +33 (0)1 69 33 03 09

## Typical on Jig Measurements

Bias conditions: Vd=6V, Vg tuned for Id = 850mA

preliminary

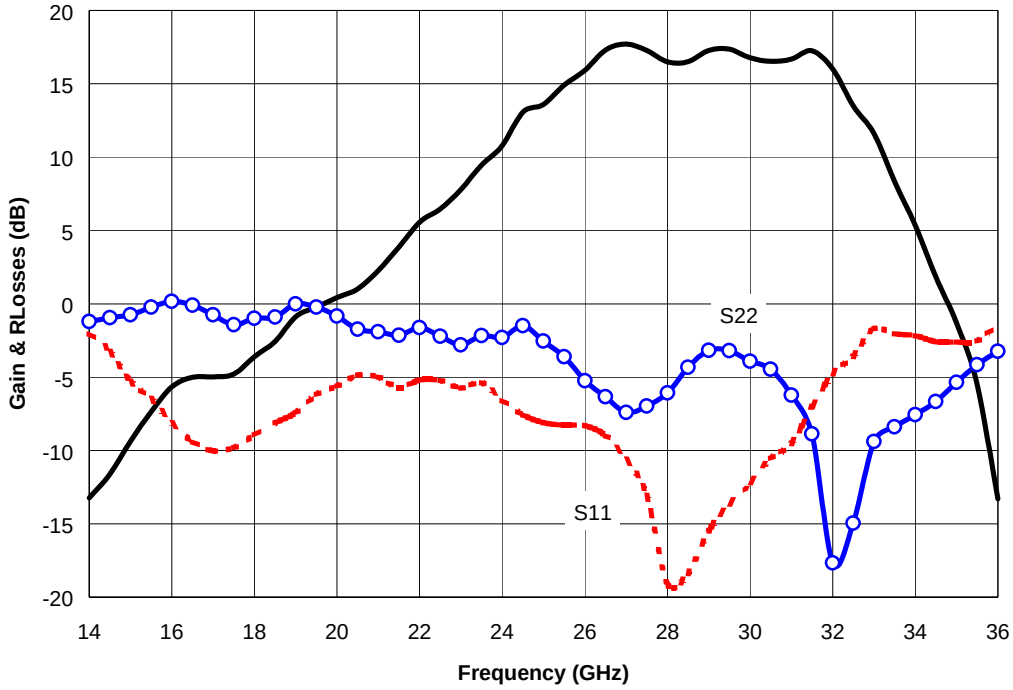


Linear Gain & Return Losses versus frequency

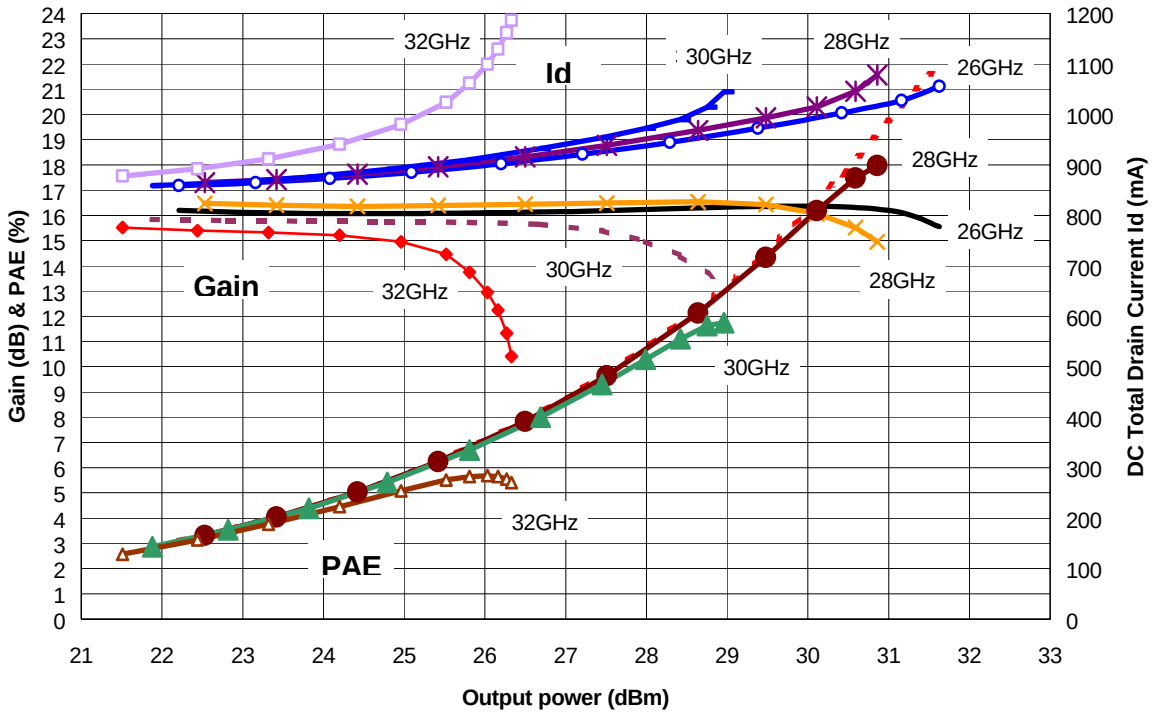


Gain, PAE & DC drain current vs Output power @ different frequencies



Route Départementale 128 , B.P.46 - 91401 ORSAY Cedex - FRANCE
Tel.: +33 (0)1 69 33 03 08 - Fax : +33 (0)1 69 33 03 09

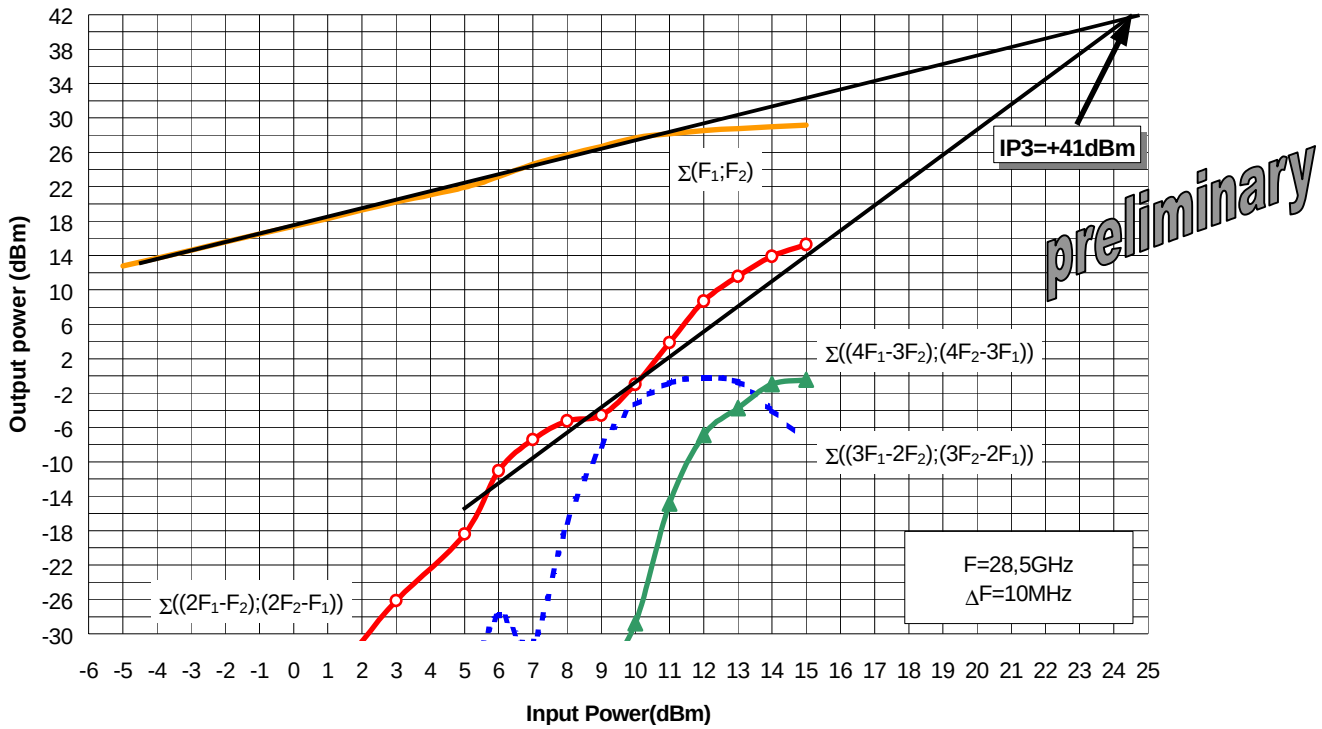


IP3 versus total input power @ 28.5GHz

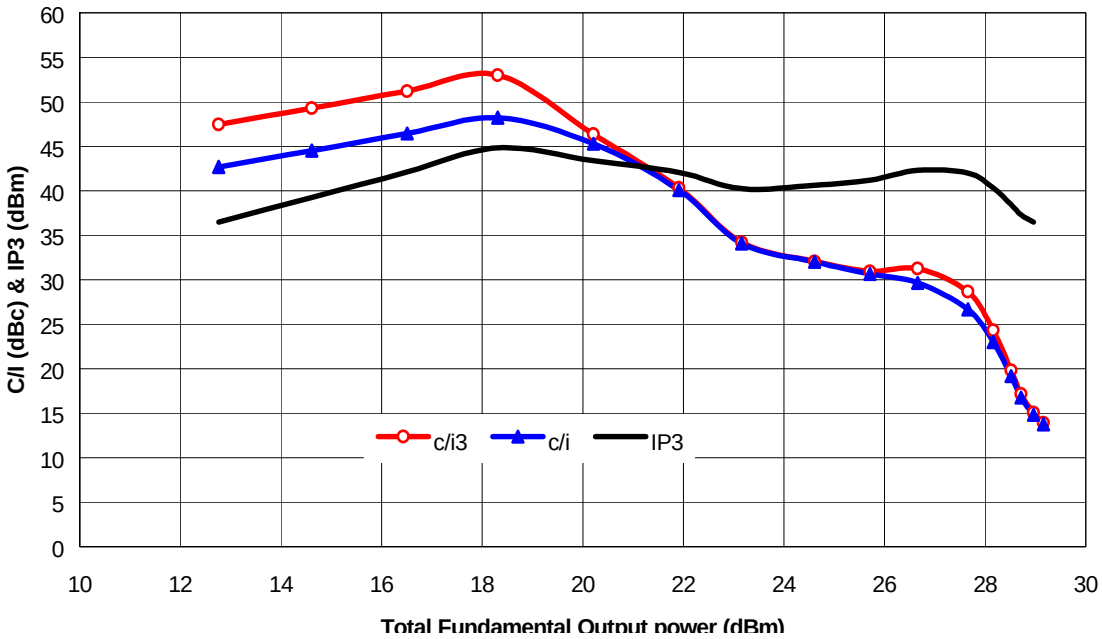


C/I & IP3 versus total fund. output power @ 28.5GHz (ΔF=10MHz)



Route Départementale 128 , B.P.46 - 91401 ORSAY Cedex - FRANCE
Tel.: +33 (0)1 69 33 03 08 - Fax : +33 (0)1 69 33 03 09

## Chip Assembly and Mechanical Data

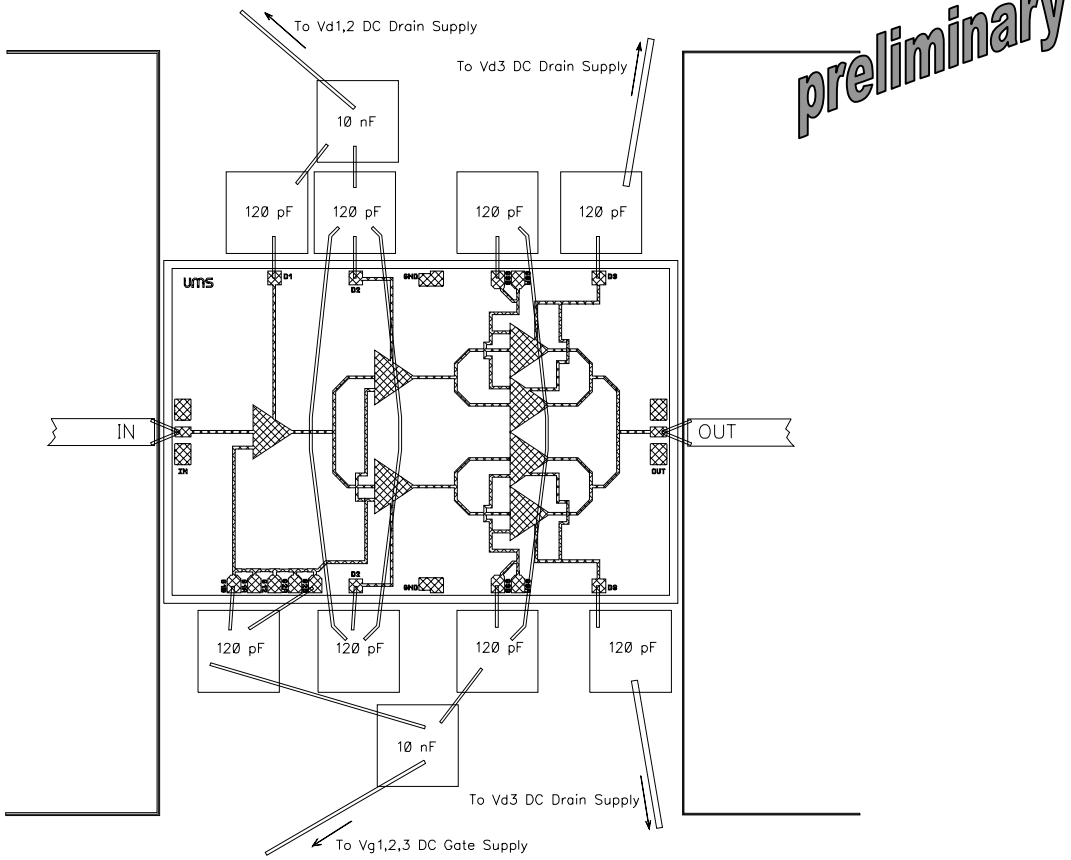


Note : Supply feed should be capacitively bypassed. 25µm diameter gold wire is to be prefered.

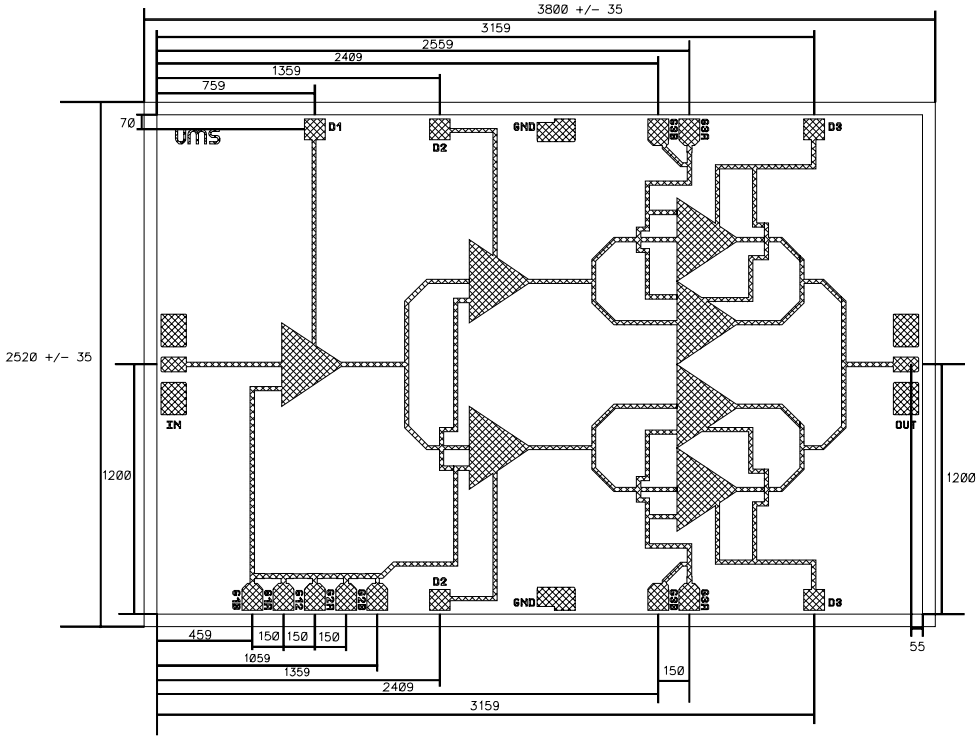


**Bonding pad positions.**

( Chip thickness : 50µm. All dimensions are in micrometers )



**Route Départementale 128 , B.P.46 - 91401 ORSAY Cedex - FRANCE**
**Tel.: +33 (0)1 69 33 03 08 - Fax : +33 (0)1 69 33 03 09**

preliminary

## Application note

Bias operation sequence:

ON: Supply Gate voltage
Supply Drain voltage
OFF: Cut off Drain voltage
Cut off Gate voltage

Due to 50µm thickness, specific care is requested for the handling and assembly.

## Ordering Information

Chip form : CHA5296-99F/00





**Route Départementale 128 , B.P.46 - 91401 ORSAY Cedex - FRANCE**
**Tel.: +33 (0)1 69 33 03 08 - Fax : +33 (0)1 69 33 03 09**

united monolithic semiconductors