Plastic Packaged Surface Mount Varactor Diodes

SMV1100, SMV1200, SMV1400 Series

Features

- Industry Standard Outlines: SOD–323 and SOT SOT 23 Packages
- High "Q" Abrupt and Hyperabrupt Junction Designs
- Single and Common Cathode Configurations
- Available for 3 Volt Battery Operated Circuits
- Priced for High Volume Commercial Applications
- Available in Tape and Reel

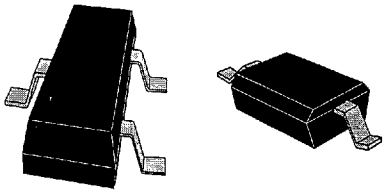

Maximum Ratings (Ta = 25 °C)

Forward Current:	100 mA
Power Dissipation:	250 mW
Junction Temperature:	125 °C
Storage Temperature:	–55 to 150 °C
Operating Temperature:	–55 to 125 °C

Description

The surface mount plastic varactor diodes are designed for RF and Microwave applications in VCOs, electronically tunable filters and matching networks. Package offerings include the SOT–23 and the small footprint SOD–323 package. Alpha offers a comprehensive capability in capacitance values, package options and voltage ratings all aggressively priced for high volume commercial applications.

The SMV1200–49 to SMV1200–55 varactors were specifically designed for battery operated applications where 3 to 5 volts is available. These varactors have capacitance ratios of greater than 12 from 0.3 to 4.7 volts.

Alpha's hyperabrupt varactors are available in a wide variety of tightly specified capacitance values and high capacitance ratios. They are available as single junctions and common cathode configurations where they may be employed in a back–to–back orientation to reduce distortion.

Alpha's abrupt junction varactors are noted for extremely high Q factor and are the preferred choice in applications that require low phase noise and high temperature stability.

The inductance of the SOT–23 package is typically 1.5 nH for each junction. Employing a common cathode SOT–23 with the varactor junctions connected in parallel reduces the inductance to approximately 0.9 nH. The inductance of a varactor in the SOD–323 package is approximately 1.2 nH.

ALPHA INDUSTRIES, INC. • 20 SYLVAN ROAD, WOBURN, MA 01801
TEL: (617) 935–5150 • FAX: (617) 824–4579

Electrical Characteristics (TA = 25°C)

High Ratio Hyperabrupt Junction Varactors for Battery Operated Applications

Breakdown Voltage, Vb (10 μA), 15V Min
Reverse Leakage Current, Ir (12V), 50 nA Max
Capacitance Ratio C_T 0.3V/C_T 3.0V, 7.8 Typical

				
Single	**Single**	**Series**	**Common Anode**	**Common Cathode**
SOD 323	**SOT 23**			

Part Number	C_T @ 0.3V (pF)		C_T @ 3.0V (pF)	C_T @ 4.7V (pF)		C_T 0.3V/C_T 4.7V		R_S @ 3V 50 MHz	Package Style (SOT 23)
	typ	min	typ	typ	max	typ	min	max (Ω)	
SMV1200–49 SMV1200–149	31	28	4.0	2.6	2.8	12.1	11.0	1	Single Common Cathode
SMV1200–50 SMV1200–150	36	33	4.5	3.0	3.3	12.2	11.0	0.9	Single Common Cathode
SMV1200–51 SMV1200–151	42	38	5.5	3.4	3.8	12.2	11.0	0.75	Single Common Cathode
SMV1200–53 SMV1200–153	53	48	6.7	4.3	4.8	12.3	11.0	0.6	Single Common Cathode
SMV1200–55 SMV1200–155	64	58	8.0	5.2	5.8	12.3	11.0	0.5	Single Common Cathode

12 Volt Hyperabrupt Junction Varactors for General Purpose

Reverse Breakdown Voltage, V_{BR} (10 μA): 12V Minimum
Reverse Leakage Current, I_R (8V): 50 nA Maximum

Part Number	C_T @ 1V (pF)		C_T @ 2.5V (pF)		C_T @ 4V (pF)		Q @ 4V, 50 MHz	Package Style (SOT 23)
	min	typ	min	max	typ	max	min	
SMV1204–11	95	100	40	65	20	25	80	Single
SMV1204–12	42	50	18	27	9.0	12	150	Single
SMV1204–13	17	22	8.5	10.5	4.0	5.5	200	Single
SMV1204–14	14.5	16	6.5	7.8	3.0	4.8	300	Single
SMV1204–15	8.7	9.5	4.3	5.5	2.0	2.9	350	Single
SMV1201–97	85	–	–	–	15.0	30.0	500*	Single

*Q @ 2V, F=1 MHz

Part Number	V_B @ 10V	I_R @ 8V (nA)	C_T @ 0.2V (pF)		C_T @ 2V (pF)		C_T @ 6V, 50 MHz		Q @ 2V, 50 MHz	Package Style (SOT 23)
	min	max	min	max	min	max	min	max	min	
SMV1204–99 SMV1204–199	12	50	11	14	4	6.5	1.2	1.9	250	Single Common Cathode

Part Number	C_T @ 2.5V (pF)		C_T @ 1V/C_T @ 2.5V		C_T @ 2.5V/C_T @ 4V (pF)		Q @ 4V, 50 MHz	Package Style (SOT 23)
	min	max	min	max	min	max	min	
SMV1204–22	18	27	1.5	2.0	1.5	2.0	150	Single
SMV1204–23	9	13	1.5	2.0	1.5	2.0	200	Single
SMV1204–24	6	8	1.5	2.0	1.5	2.0	300	Single
SMV1204–25	4.2	5.6	1.5	2.0	1.5	2.0	350	Single

ALPHA INDUSTRIES, INC. • 20 SYLVAN ROAD, WOBURN, MA 01801
TEL: (617) 935–5150 • FAX: (617) 824–4579

15 Volt Hyperabrupt Junction Varactors

Reverse Breakdown Voltage, V_{BR} (10 μA): 15V Minimum
Reverse Leakage Current, I_R (12V): 50 nA Maximum

				
Single	**Single**	**Series**	**Common Anode**	**Common Cathode**
SOD 323	**SOT 23**			

Part Number	C_T @ 1V (pF)		C_T (1V)/C_T (3V)		C_T (1V)/C_T (6V)		R_S @ 3V 50 MHz	Q @ 3V, 50 MHz	Package Style (SOT 23)
	min	max	min	max	min	max	max	min	
SMV1104–33 SMV1204–33 SMV1204–133	3.0	3.6	1.5	1.9	2.6	3.3	1.2	1200	Single SOD 323 Single Common Cathode
SMV1104–34 SMV1204–34 SMV1204–134	5.85	7.15	1.6	2.0	2.8	3.4	0.8	1000	Single SOD 323 Single Common Cathode
SMV1104–35 SMV1204–35 SMV1204–135	10.35	12.65	1.6	2.0	2.9	3.4	0.6	750	Single SOD 323 Single Common Cathode
SMV1104–36 SMV1204–36 SMV1204–136	15.50	18.50	1.6	2.0	3.0	3.5	0.5	700	Single SOD 323 Single Common Cathode
SMV1204–37	45.00	54.00	1.6	2.0	3.0	3.5	0.25	500	Single

20 Volt Hyperabrupt Junction Varactors for General Wide Band Applications

Reverse Breakdown Voltage, V_{BR} (10 μA): 20V Minimum
Reverse Leakage Current, I_R (16V): 50 nA Maximum

Part Number	C_T @ V_R1 (pF)		V_R1 (V)	C_T2 @ V_R2 (pF)		V_R2 (V)	C_T1/C_T2	Q @ V_{R1}, 50 MHz	Package Style (SOT 23)
	min	max		min	max		min	min	
SMV1200–04 SMV1200–104	10.5	12.5	3	2.1	2.5	20	4.6	400	Single Common Cathode
SMV1200–07 SMV1200–107	25	31	3	4.5	5.3	20	4.8	300	Single Common Cathode
SMV1204–04 SMV1204–104	2.5	3.3	4	0.6	0.85	20	3.0	500	Single Common Cathode
SMV1204–05 SMV1204–105	4.5	5.5	4	0.9	1.2	20	4.2	500	Single Common Cathode
SMV1202–03	18	22	4	3.1	3.9	20	4.6	300	Single
SMV1202–08	45	55	4	7.3	9.2	20	5.0	200	Single
SMV1202–12	100	120	4	16	20	20	5.2	125	Single

4

ALPHA INDUSTRIES, INC. • 20 SYLVAN ROAD, WOBURN, MA 01801
TEL: (617) 935–5150 • FAX: (617) 824–4579

Low Series Resistance Abrupt Junction Varactors

Reverse Breakdown Voltage, V_{BR} (10 μA): 12V Minimum
Reverse Leakage Current, Ir (10V): 50 nA Maximum

				
Single	**Single**	**Series**	**Common Anode**	**Common Cathode**
SOD 323	**SOT 23**			

Part Number	C_T @ 1.0V (pF)		C_T @ 4.0V (pF)		R_S Max @ 1V, 50 MHz	Package Style (SOD 323)
	min	max	min	max	max	
SMV1401–99	17.4	20.0	10.0	12.1	0.25	**Single SOD 323**
SMV1401–98	36.3	41.7	20.7	25.3	0.20	**Single SOD 323**

30 Volt Abrupt Junction Varactors For General Purpose

Reverse Breakdown Voltage, V_{BR} (10 μA): 30V Minimum
Reverse Leakage Current, I_R (24V): 50 nA Maximum

Part Number	C_T @ 4V (pF)		C_T 0/C_T30	R_S @ 4V 50 MHz (Ohms)	Q @ 4V, 50 MHz	Package Style (SOT 23)
	min	max	min	max	min	
SMV1400–08 SMV1400–108	1.62	1.98	4.1	0.60	2900	Single Common Cathode
SMV1400–09 SMV1400–109	1.98	2.42	4.1	0.50	2800	Single Common Cathode
SMV1400–10 SMV1400–110	2.43	2.97	4.2	0.45	2600	Single Common Cathode
SMV1400–11 SMV1400–111	2.97	3.63	4.2	0.40	2500	Single Common Cathode
SMV1400–13 SMV1400–113	3.51	4.29	4.2	0.35	2400	Single Common Cathode
SMV1400–14 SMV1400–114	4.23	5.17	4.2	0.30	2200	Single Common Cathode
SMV1400–15 SMV1400–115	5.04	6.16	4.3	0.27	2100	Single Common Cathode
SMV1400–16 SMV1400–116	6.12	7.48	4.3	0.24	2000	Single Common Cathode
SMV1400–17 SMV1400–117	7.38	9.02	4.3	0.22	1800	Single Common Cathode
SMV1400–19	9.00	11.00	4.4	0.20	1600	Single
SMV1400–20	10.80	13.20	4.4	0.18	1500	Single
SMV1400–21	13.50	16.50	4.4	0.18	1200	Single
SMV1400–22	16.20	19.80	4.4	0.18	1000	Single

1. The outline 546–011 contains a single varactor junction in a two leaded SOD–323 package. The outline 434–043 contains a single varactor junction in a three leaded SOT–23 package. The outline 434–013 contains two varactor junctions in a common cathode configuration in a three leaded SOT–23 package.
2. For part numbers designating two varactor junctions in a common cathode configuration, the listed electrical characteristics apply to a single junction.

ALPHA INDUSTRIES, INC. • 20 SYLVAN ROAD, WOBURN, MA 01801
TEL: (617) 935–5150 • FAX: (617) 824–4579

Typical Performance Data

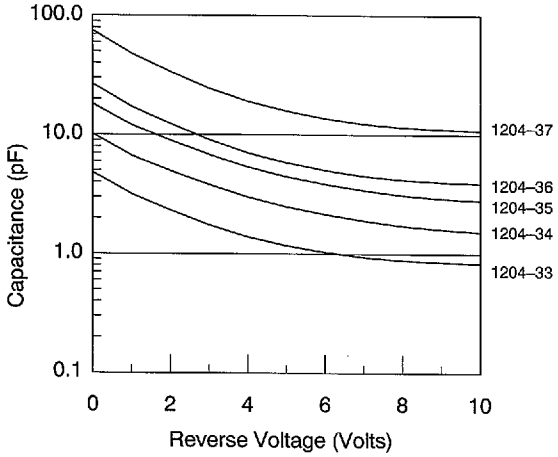

Capacitance vs. Reverse Voltage

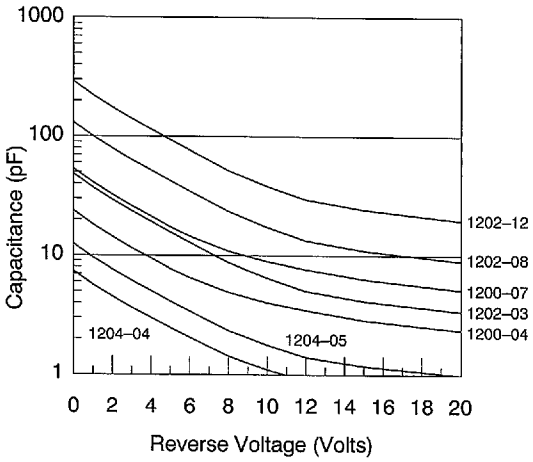

Capacitance vs. Reverse Voltage

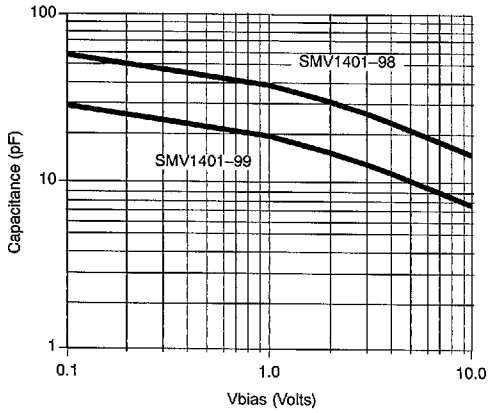

Capacitance vs. Voltage

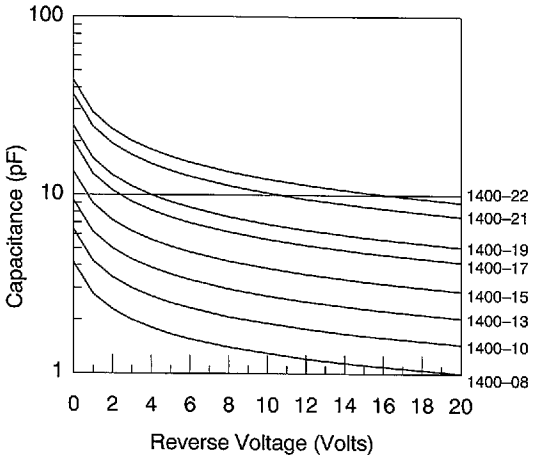

Capacitance vs. Reverse Voltage

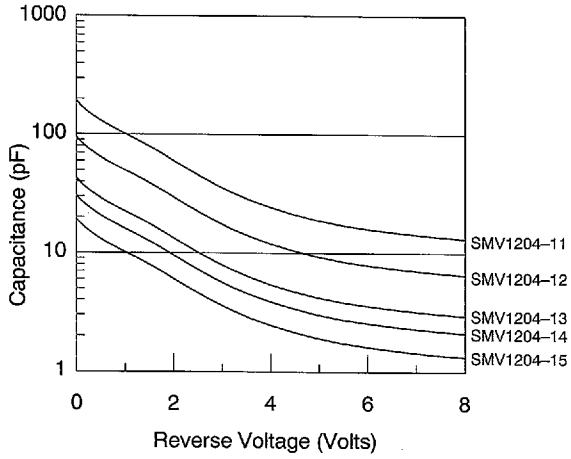

Capacitance vs. Reverse Voltage

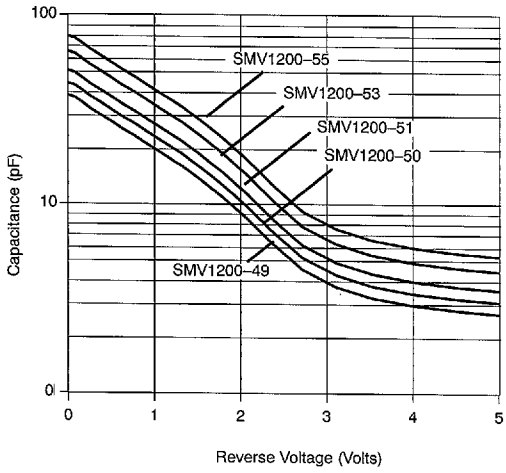

Capacitance vs. Voltage

ALPHA INDUSTRIES, INC. • 20 SYLVAN ROAD, WOBURN, MA 01801
TEL: (617) 935–5150 • FAX: (617) 824–4579

Outline Dimensions

SOT 23

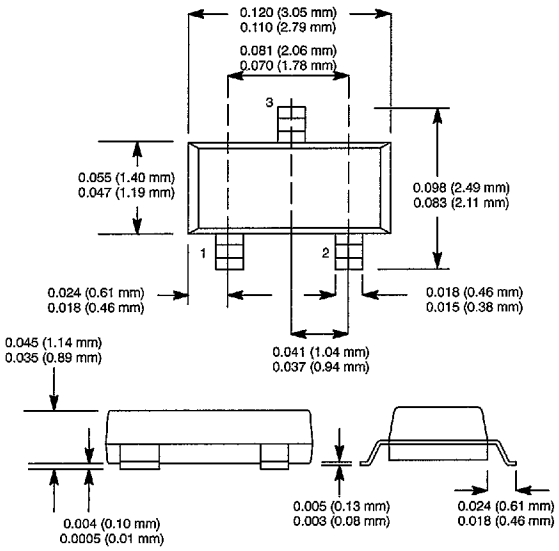

SOD 323

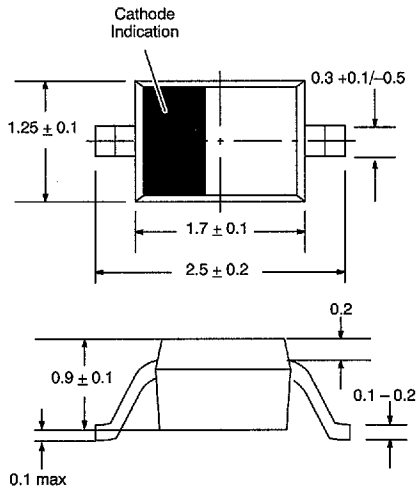

Dimensions in Millimeters

ALPHA INDUSTRIES, INC. • 20 SYLVAN ROAD, WOBURN, MA 01801
TEL: (617) 935–5150 • FAX: (617) 824–4579

RF GaAs MMIC Products in Metal Packages

Numerical Index